Right Connections

towbar wiring kits for the uk

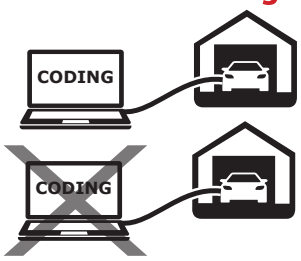

Right Connections Duplex-Kit

Tow bar wiring harness
13pin/ISO11446 including
two different operation-modes

SEAT/SKODA

Ibiza V (KJ1, KJG)	**06/2017 >>**
Arona (KJ7, KJP)	**09/2017 >>**
Fabia IV (PJ)	**09/2021 >>**

Vehicles with and without trailer preparation!

Part No: VW-305-13M

Electric wiring kit for towbars / 13-pin / 12 Volt / ISO 11446

Fitting instructions

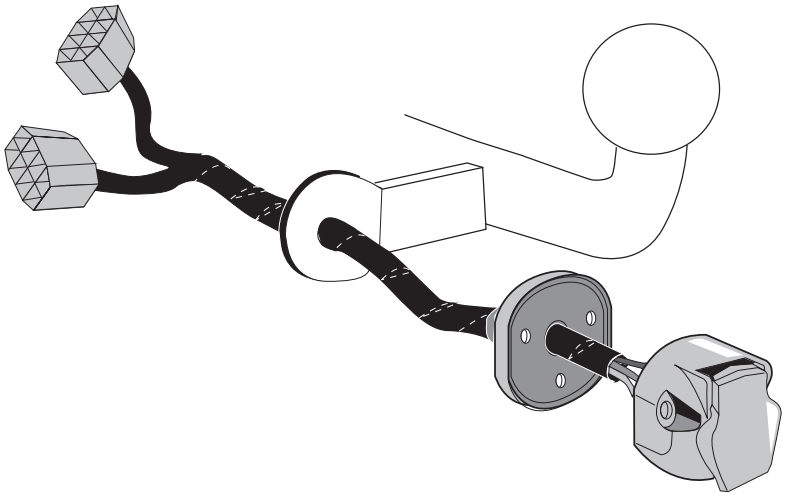

⚠ IMPORTANT!

The installation of the towing electrics kit must be carried out by a qualified car technician. No claim can be made for compensation or legal liability in case the kit is improperly installed or modified, in case the vehicle is insufficiently coded, or in case technical changes (software-updates) are made after the towing electrics kit has been put into operation, for example during product recalls by the vehicle manufacturer or OTA maintaining (Over-The-Air software updates). Before installing the towing electrics kit, you must verify the compatibility of the vehicle and the towing electrics kit. Evaluate vehicle fault memory. Only start installation on a fault-free vehicle. Read the fitting instructions completely. In case of questions, please contact technical support: Technical@rightconnect.co.uk and/or 01952 608750 OPT 2.The installation manual contains important information and must be kept with the vehicle service documents after the installation of the towing electrics kit. Vehicle manufacturer diagnostic systems do not have access to the internal fault memory of the trailer module. Error logs in diagnostic processes may be due to improper installation or insufficient coding of the vehicle. If necessary, disconnect the trailer module and repeat the diagnostic process. Limit the time for troubleshooting to a maximum of 0,5 hours and contact technical support in case of any problems. The trailer socket test must be carried out with a suitable test device, a trailer or a load carrier. LED test plugs without load resistors are not suitable for a proper function test. Trailer or load carriers must be equipped with a rear fog light. If a trailer socket adaptor has been used, this must be removed from the trailer socket after trailer operation. All information and illustrations shown are non-binding. Subject to technical changes.

Right Connections UK Ltd
Unit 503 Queensway Business Park
TELFORD TF1 7UL UK

SALES: +44 (0)1952 608750 - Option 1
TECHNICAL: +44 (0)1952 608750 - Option 2

Web: www.rightconnections.co.uk
Email: Technical@rightconnect.co.uk

Revision: 1 / 23.07.2026
VW-305-13M

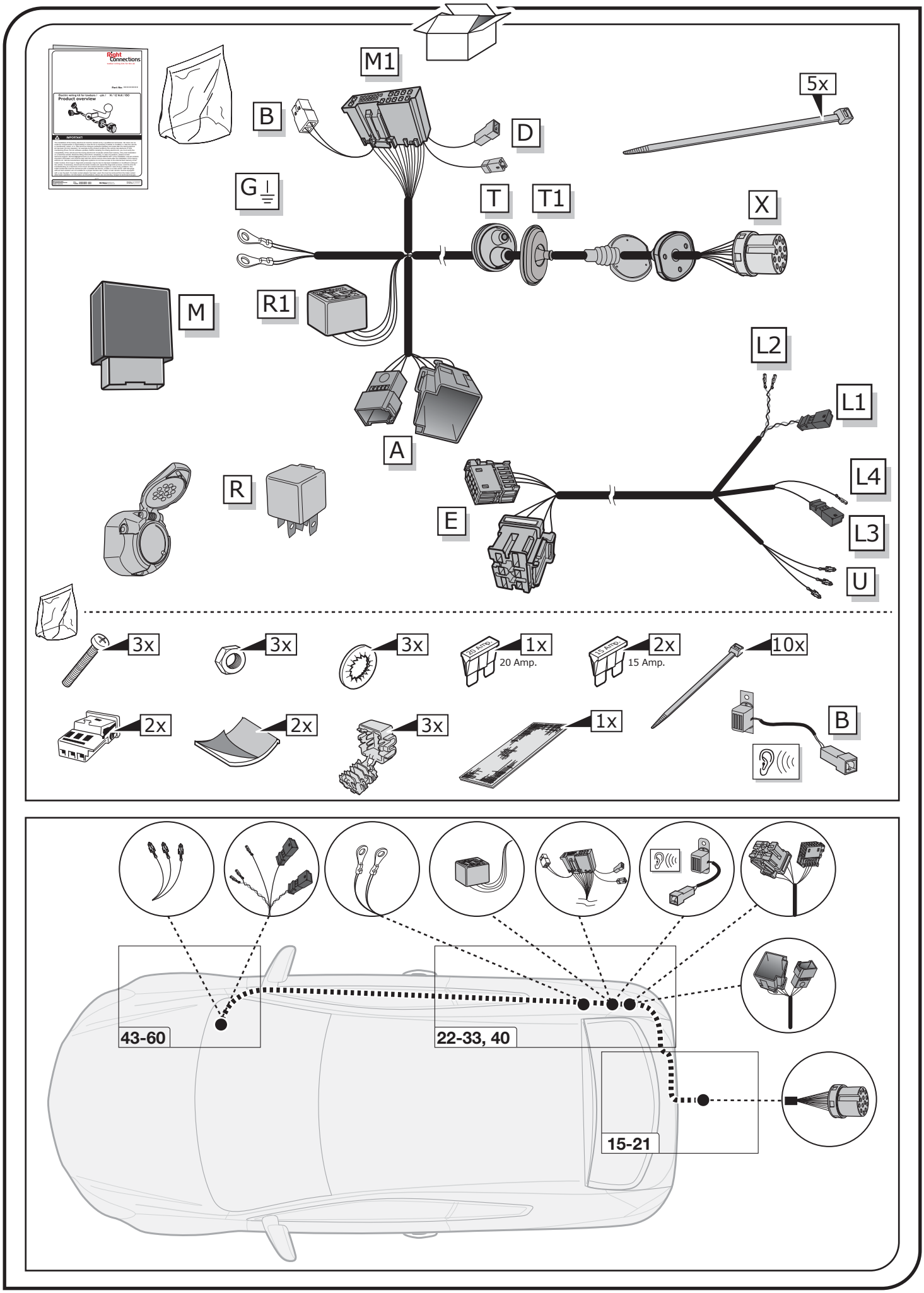

Right Connections UK Ltd
Unit 503 Queensway Business Park
TELFORD TF1 7UL UK

SALES: +44 (0)1952 608750 - Option 1
TECHNICAL: +44 (0)1952 608750 - Option 2

Web: www.rightconnections.co.uk
Email: Technical@rightconnect.co.uk

Revision: 1 / 23.07.2026
VW-305-13M

Duplex-Mode 1 - With Coding (read/write)

INFO

Seat Ibiza V (KJ1, KJG) 06/2017 >> 07/2023
Seat Arona (KJ7, KJP) 09/2017 >> 07/2023
Skoda Fabia IV (PJ) 09/2021 >> 07/2023

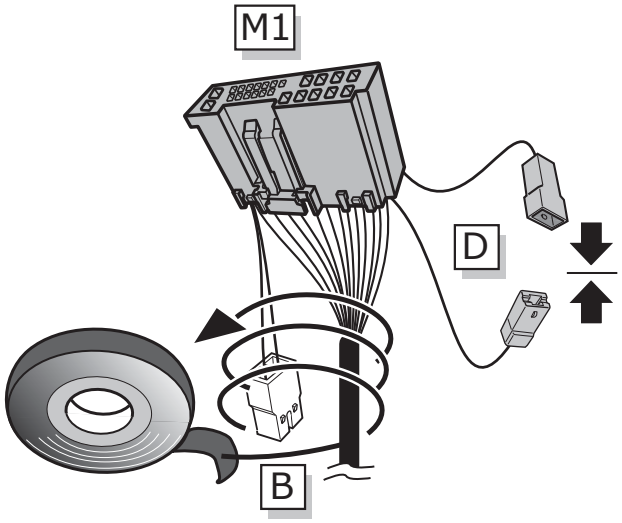

Duplex-Mode 2 - Without Coding (read-only)

INFO

Seat Ibiza V (KJ1, KJG) 08/2023 >>
Seat Arona (KJ7, KJP) 08/2023 >>
Skoda Fabia IV (PJ) 08/2023 >>

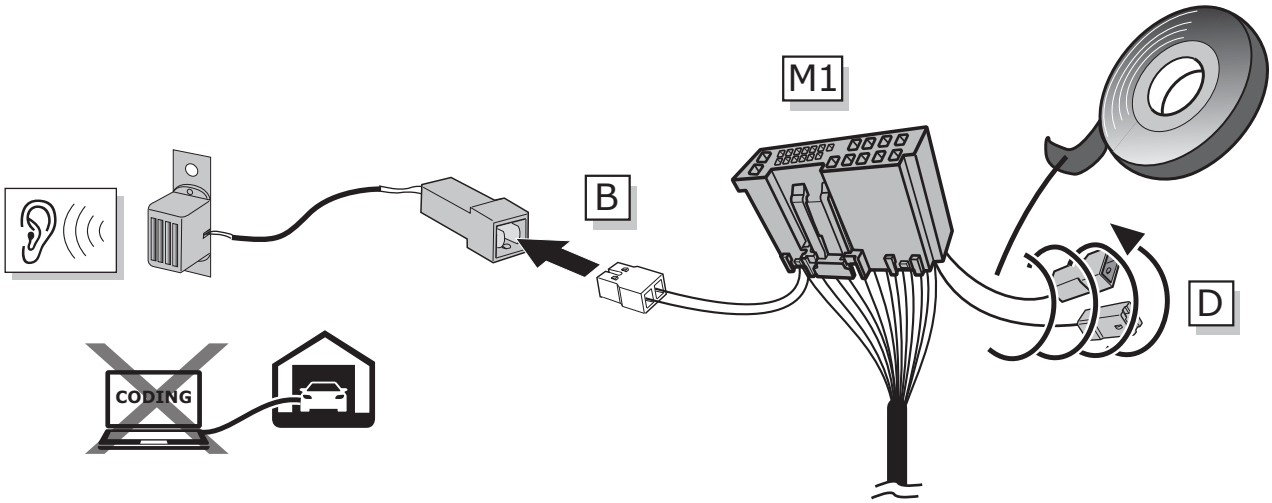

Vehicles with the equipment codes NI1, NI7, NI8, and NI9 currently cannot be coded for trailer operation.
The so-called PR codes NI1, NI7, NI8, and NI9 represent an extended protection device from Volkswagen AG (SFD2), which will be implemented starting August 2023 and now affects all models. For vehicles with the aforementioned PR codes, the ECS Duplex installation kit must be installed in read-only mode as described above.

Right Connections UK Ltd
Unit 503 Queensway Business Park
TELFORD TF1 7UL UK

SALES: +44 (0)1952 608750 - Option 1
TECHNICAL: +44 (0)1952 608750 - Option 2

Web: www.rightconnections.co.uk
Email: Technical@rightconnect.co.uk

Revision: 1 / 23.07.2026
VW-305-13M

Duplex-Mode 2 - Without Coding (read-only)

Please note:

This wiring kit does not support any vehicle assistance systems in Duplex 2 mode (read-only).
Assistance systems may need to be deactivated manually when towing a trailer or load carrier.
The rear fog light of the vehicle is not deactivated when towing a trailer.
After the towing electrics kit has been put into initial operation, manual deactivation of assistance systems may, in exceptional cases, be subsequently restricted by the vehicle manufacturer through software updates.
Any warranty from ECS is expressly excluded in this case. Please contact the vehicle manufacturer.

Duplex-Mode 2 - Without Coding (read-only)

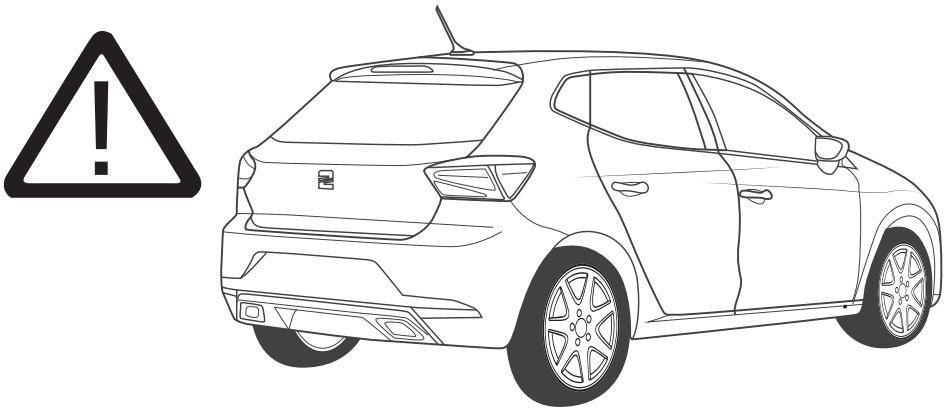

Please note:

The electric tailgate will continue to operate even when a load carrier/trailer/caravan is connected and must be operated manually to avoid damage.
Automatic or remote-controlled parking assistance systems must not be used when towing a trailer.

Right Connections UK Ltd
Unit 503 Queensway Business Park
TELFORD TF1 7UL UK

SALES: +44 (0)1952 608750 - Option 1
TECHNICAL: +44 (0)1952 608750 - Option 2

Web: www.rightconnections.co.uk
Email: Technical@rightconnect.co.uk

Revision: 1 / 23.07.2026
VW-305-13M

SYMBOL EXPLANATION

58L	Left taillight (58-L)
58R	Right taillight (58-R)
54 STOP	Stop light (54) / high mounted, third stop light (54)
L	Turn signal indicator left
R	Turn signal indicator right
	Rear fog light(s)
Reverse	Reversing lights(s)
+30 15 amp.	Permanent power supply / 13pin socket, chamber 9
+15 15 amp.	Charging wire for trailer battery/ 13pin socket, chamber 10
	Trailer / Trailer recognition
+30	Permanent cunrrent power supply
+15	Voltage after ignition

G	Ground or Earth (31)
	Ground connection battery terminal lug
	Positive connection battery terminal lug
20A	Fuse / fuse capacity 20 Amp
	Loudspeaker / buzzer
PARK DISTANCE CONTROL	Park distance control
	Switch / source of function
	Connect together
	Disconnect
PDC OFF	PDC cut off
	Look carefully at selected area
	Present / Occupied / OK

	Not present / Not occupied / not OK
L	Left
R	Right
	Acoustic indication
	Attention / important advice
REUSEABLE	Reuseable
	Trash bin
	Use tape
OPTION	Option
INFO	Information
	Measure the voltage
NO NC COMMON	Normaly open Normaly close Common

TOOLS

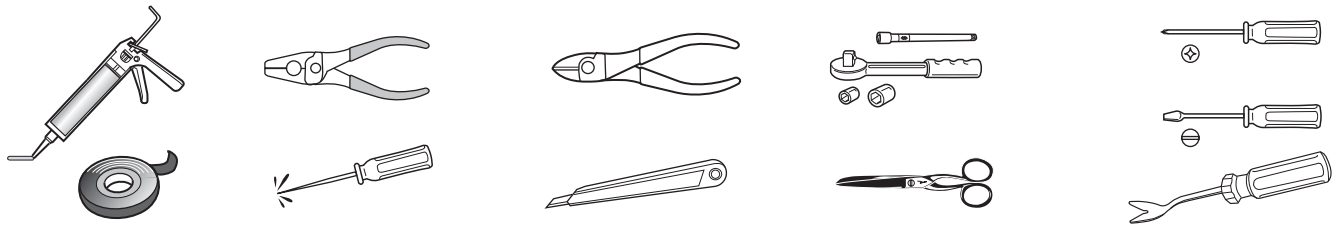

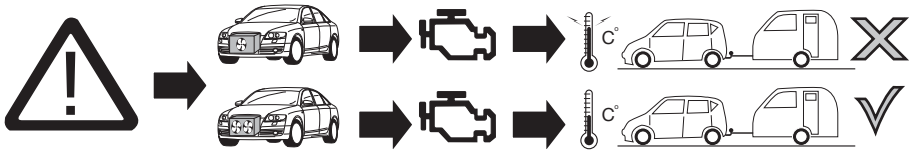

ATTENTION! The vehicle's cooling capacity may have to be increased when retrofitting a trailer coupling!
You must observe the manufacturer's instructions!!

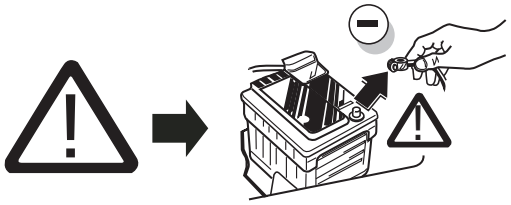

Note: It may be necessary to check if this vehicle has a stored radio code before disconnecting the battery!

Code

ATTENTION! In order to avoid mal-functions and damage to the vehicle's electrical system the earth terminal **must be disconnected** from the vehicle's battery **before starting work!**

Both the trailer module and the vehicle's control unit for the electrical system can be damaged during work on the data bus connections if the battery is not disconnected!

Please pay attention to the manufacturer's instructions when disconnecting and reconnecting the vehicle's battery!

1

Right Connections UK Ltd
Unit 503 Queensway Business Park
TELFORD TF1 7UL UK

SALES: +44 (0)1952 608750 - Option 1
TECHNICAL: +44 (0)1952 608750 - Option 2

Web: www.rightconnections.co.uk
Email: Technical@rightconnect.co.uk

Revision: 1 / 23.07.2026
VW-305-13M

All models

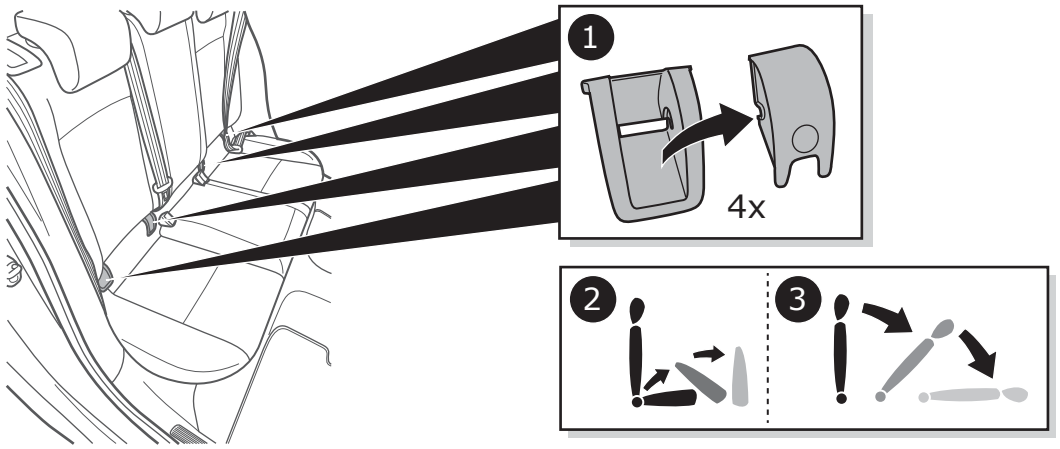

2

All models

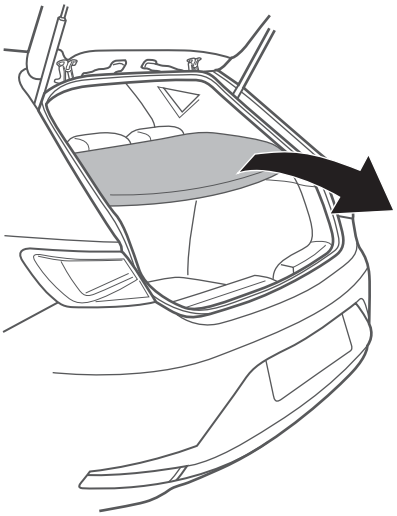

3

All models

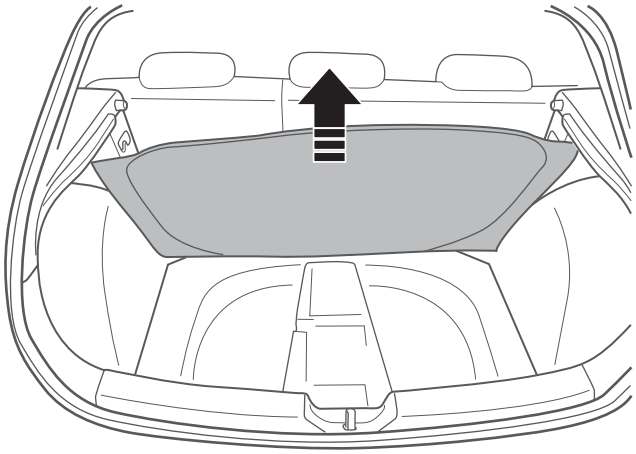

4

All models

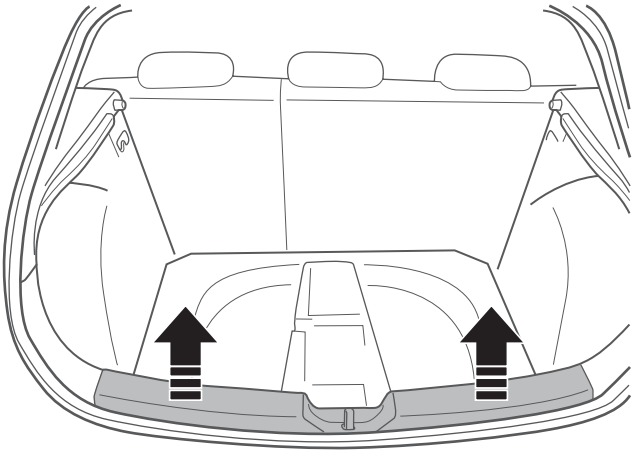

5

All models

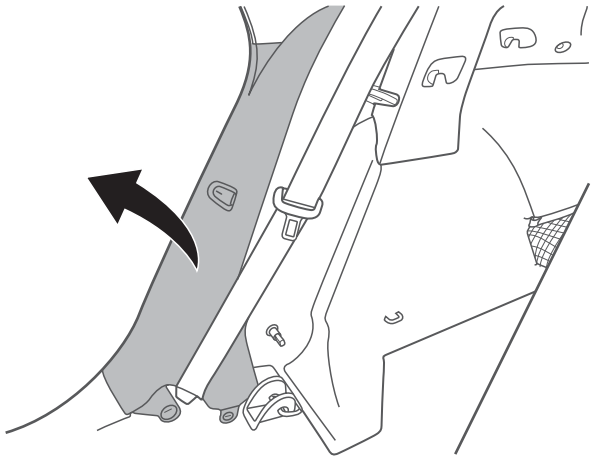

6

Right Connections UK Ltd
Unit 503 Queensway Business Park
TELFORD TF1 7UL UK

SALES: +44 (0)1952 608750 - Option 1
TECHNICAL: +44 (0)1952 608750 - Option 2

Web: www.rightconnections.co.uk
Email: Technical@rightconnect.co.uk

Revision: 1 / 23.07.2026
VW-305-13M

Arona

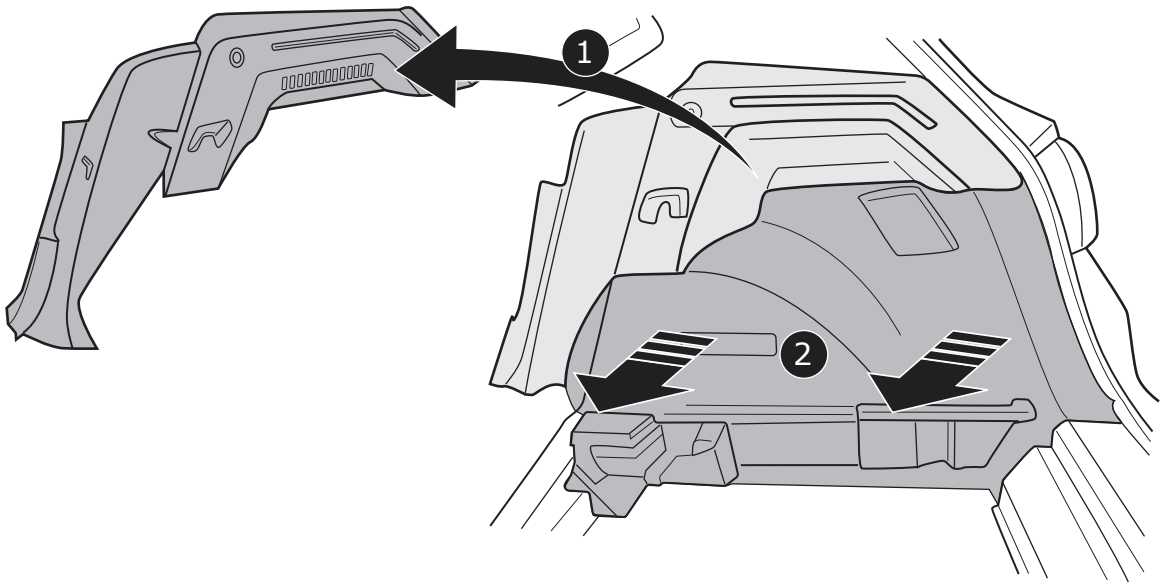

7

Arona

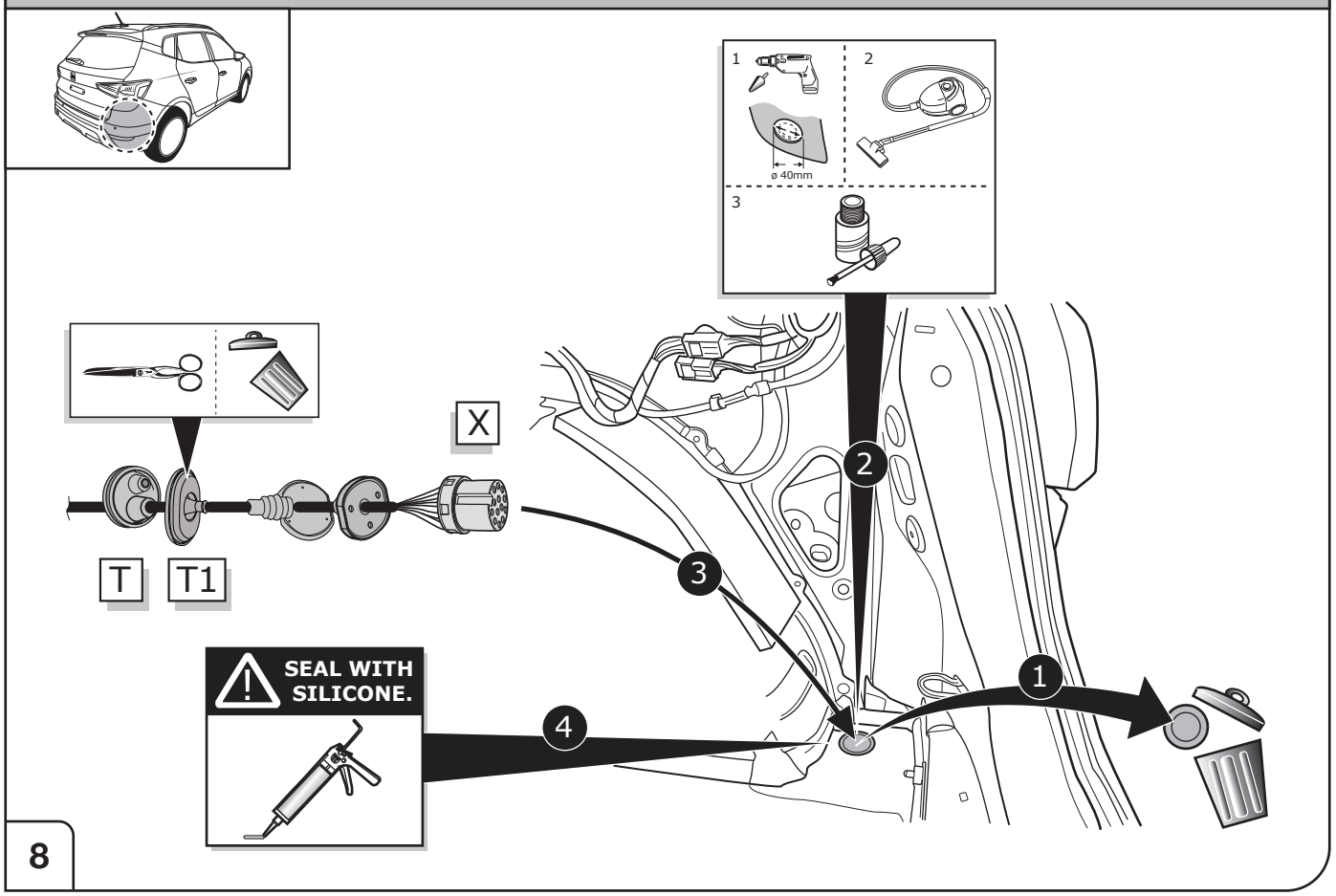

8

Right Connections UK Ltd
Unit 503 Queensway Business Park
TELFORD TF1 7UL UK

SALES: +44 (0)1952 608750 - Option 1
TECHNICAL: +44 (0)1952 608750 - Option 2

Web: www.rightconnections.co.uk
Email: Technical@rightconnect.co.uk

Revision: 1 / 23.07.2026
VW-305-13M

Ibiza

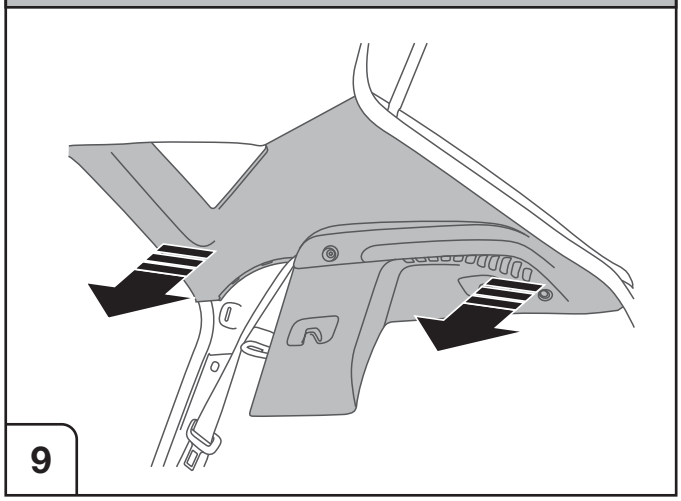

9

Ibiza

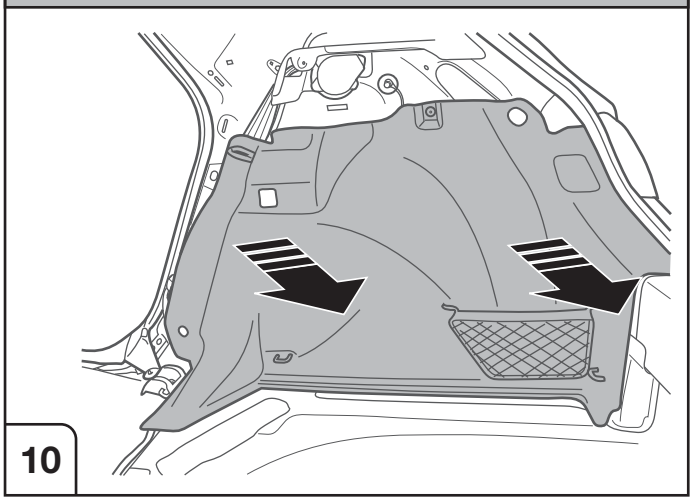

10

Ibiza

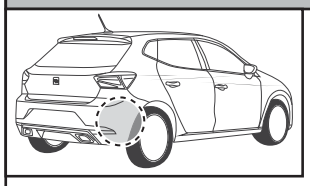

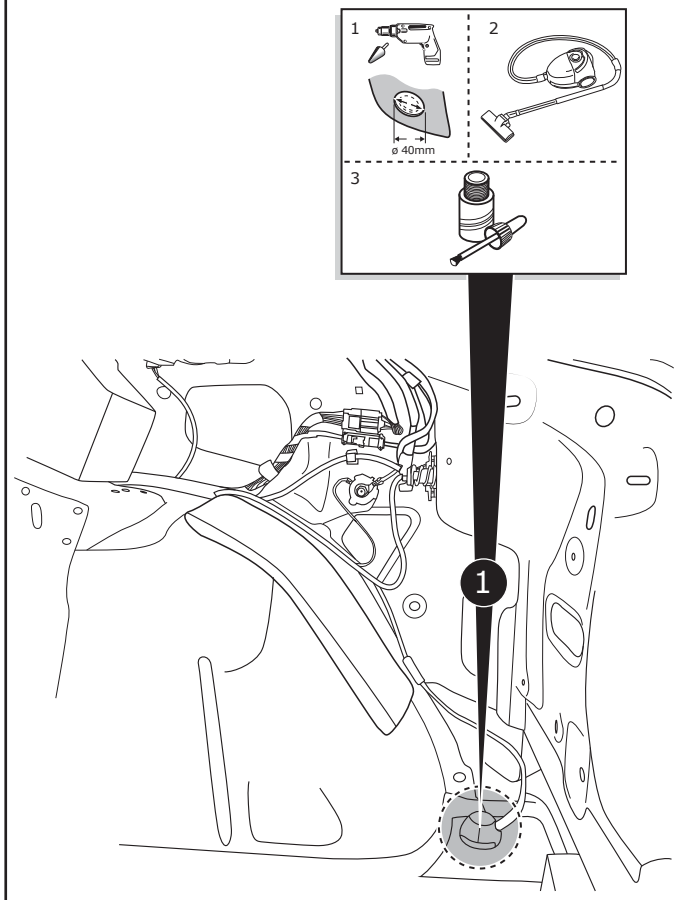

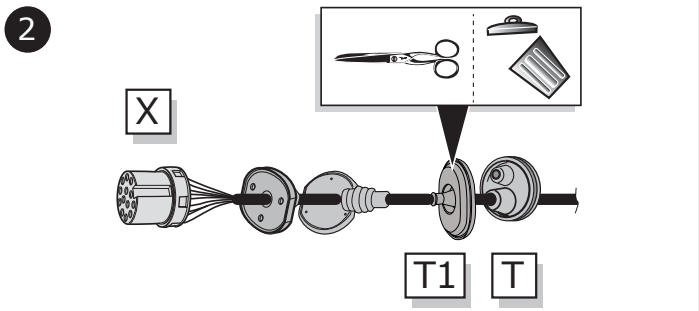

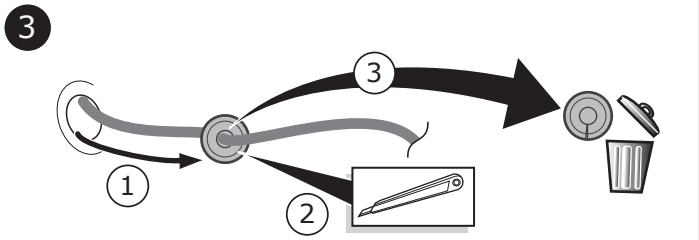

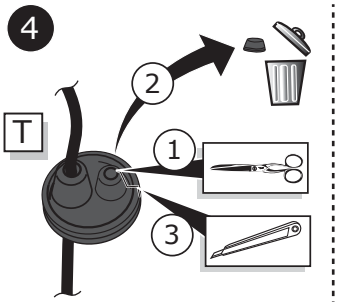

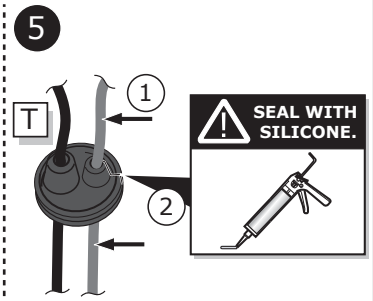

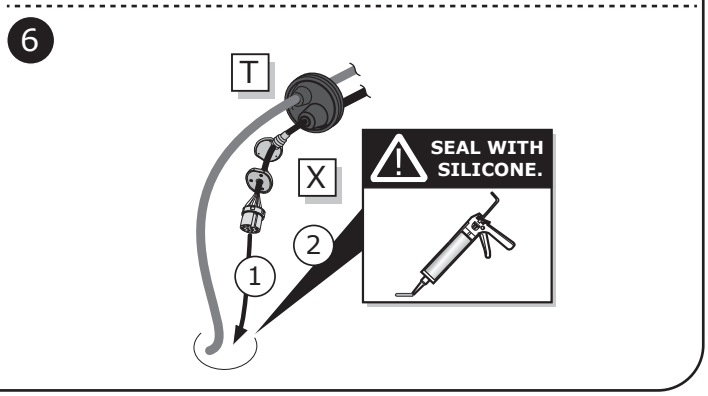

11

Right Connections UK Ltd
Unit 503 Queensway Business Park
TELFORD TF1 7UL UK

SALES: +44 (0)1952 608750 - Option 1
TECHNICAL: +44 (0)1952 608750 - Option 2

Web: www.rightconnections.co.uk
Email: Technical@rightconnect.co.uk

Revision: 1 / 23.07.2026
VW-305-13M

Fabia

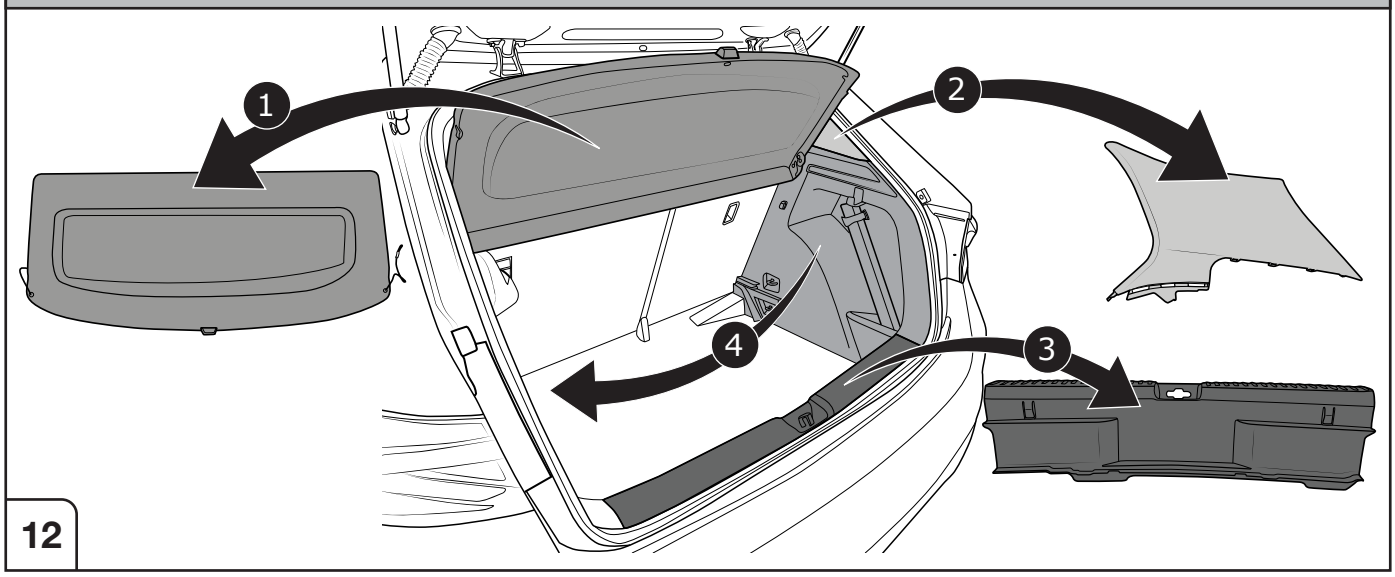

Fabia

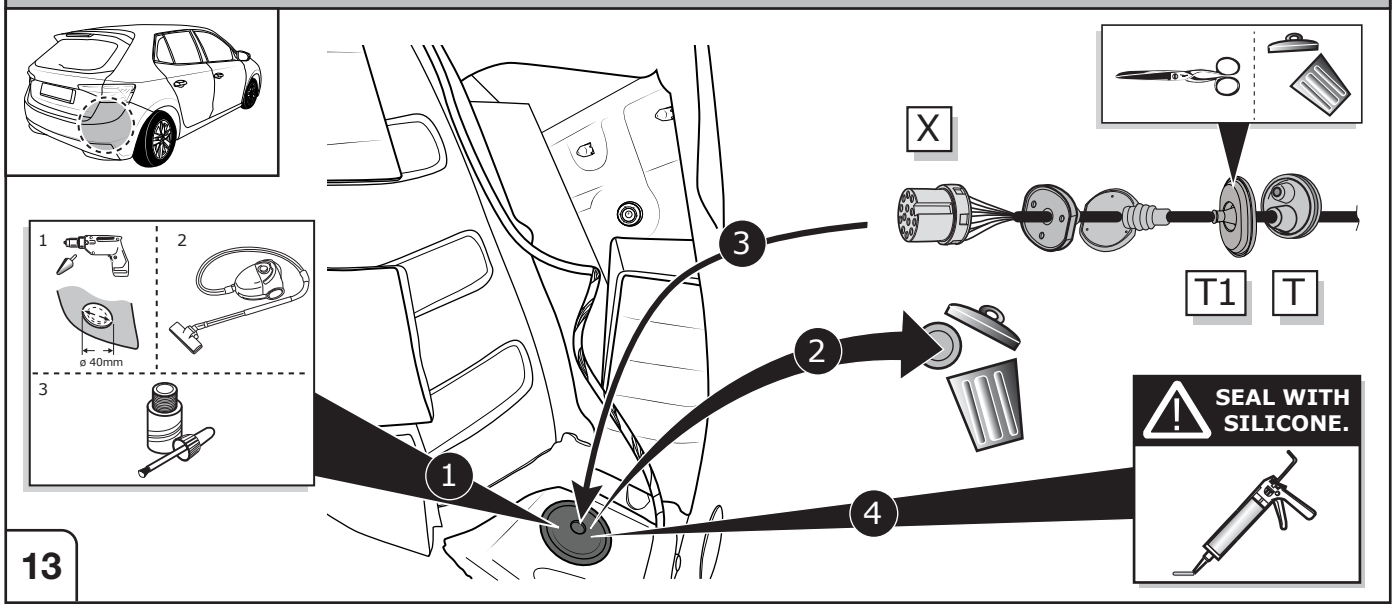

All models

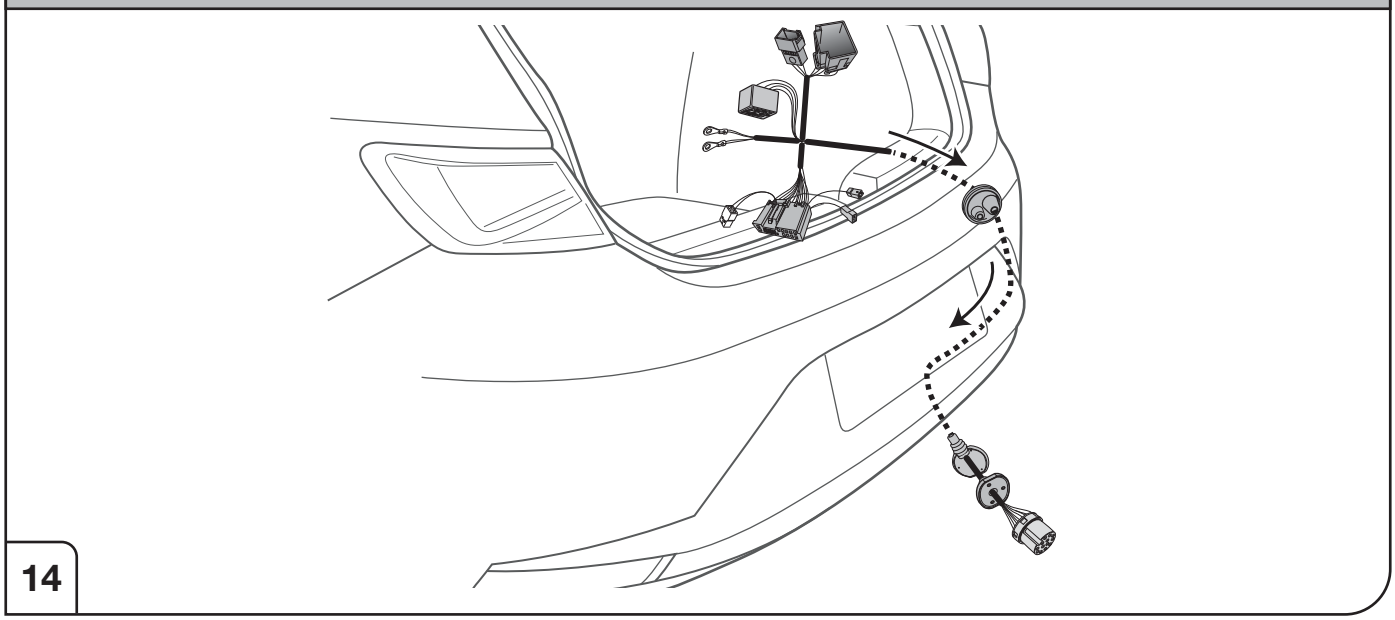

Right Connections UK Ltd
Unit 503 Queensway Business Park
TELFORD TF1 7UL UK

SALES: +44 (0)1952 608750 - Option 1
TECHNICAL: +44 (0)1952 608750 - Option 2

Web: www.rightconnections.co.uk
Email: Technical@rightconnect.co.uk

Revision: 1 / 23.07.2026
VW-305-13M

All models

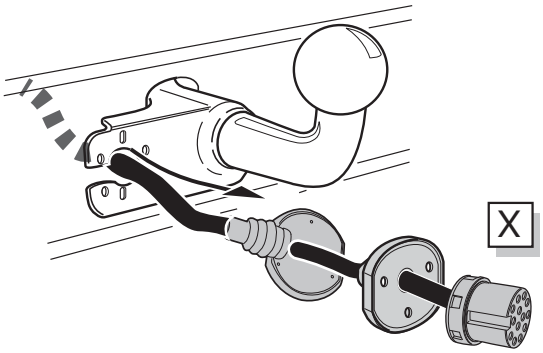

15

All models

SOCKET CONNECTION Page 33

16

All models

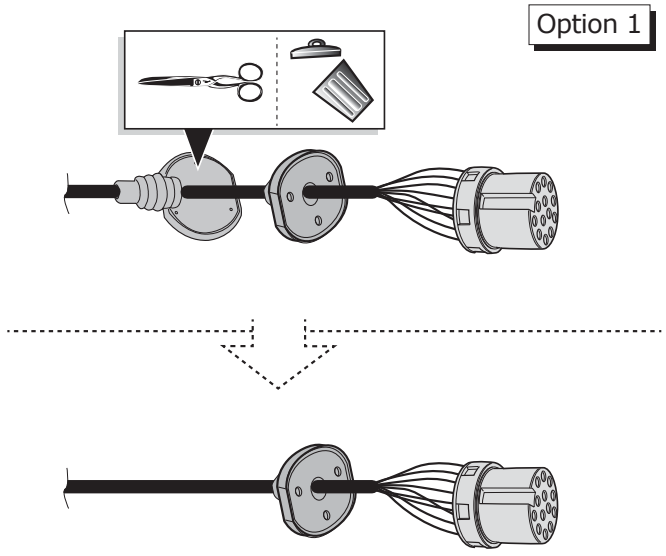

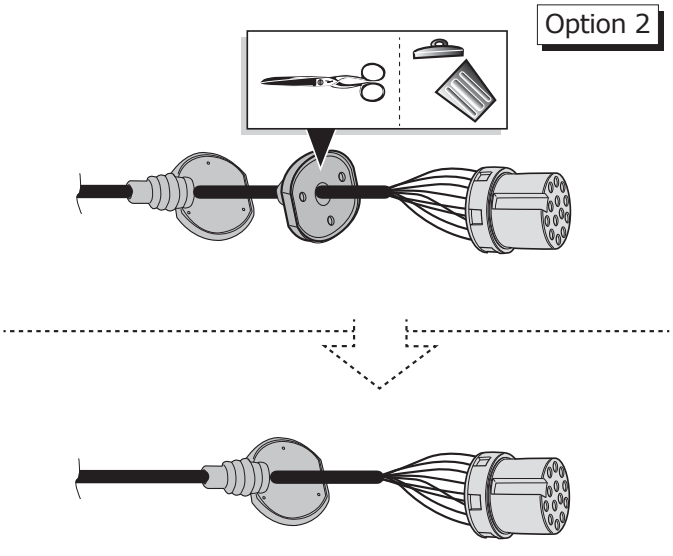

17

All models

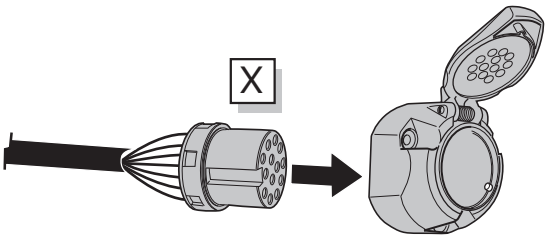

18

Right Connections UK Ltd
Unit 503 Queensway Business Park
TELFORD TF1 7UL UK

SALES: +44 (0)1952 608750 - Option 1
TECHNICAL: +44 (0)1952 608750 - Option 2

Web: www.rightconnections.co.uk
Email: Technical@rightconnect.co.uk

Revision: 1 / 23.07.2026
VW-305-13M

All models

Option 1

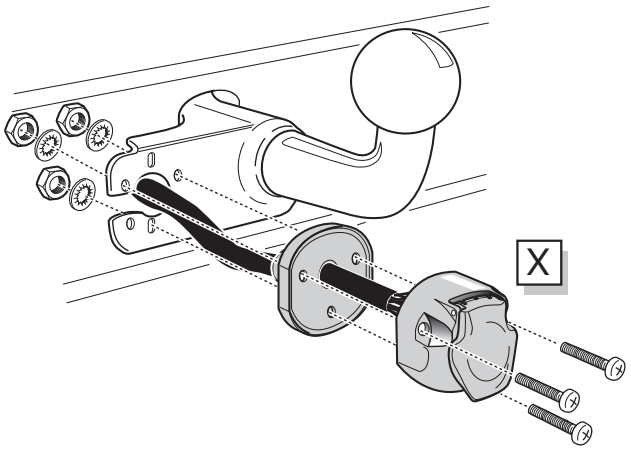

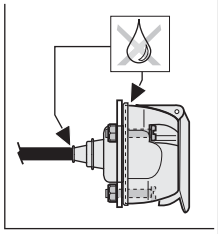

19

All models

Option 2

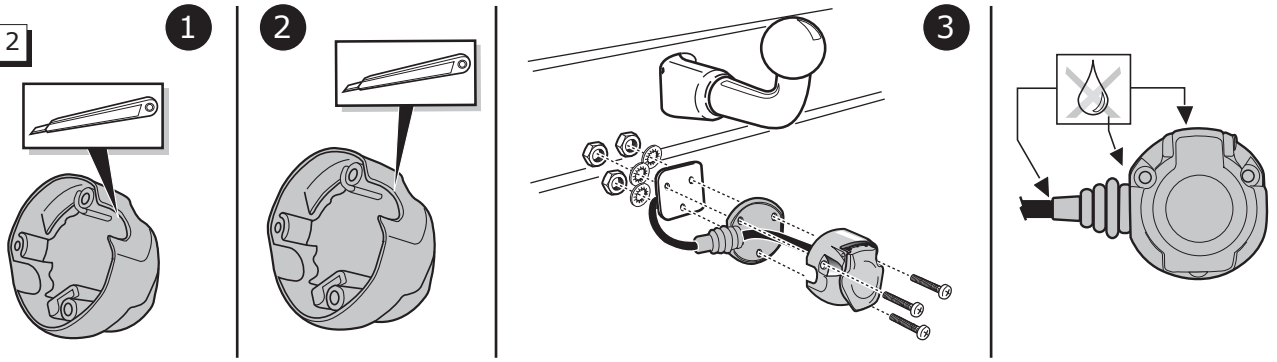

20

All models

Option 2

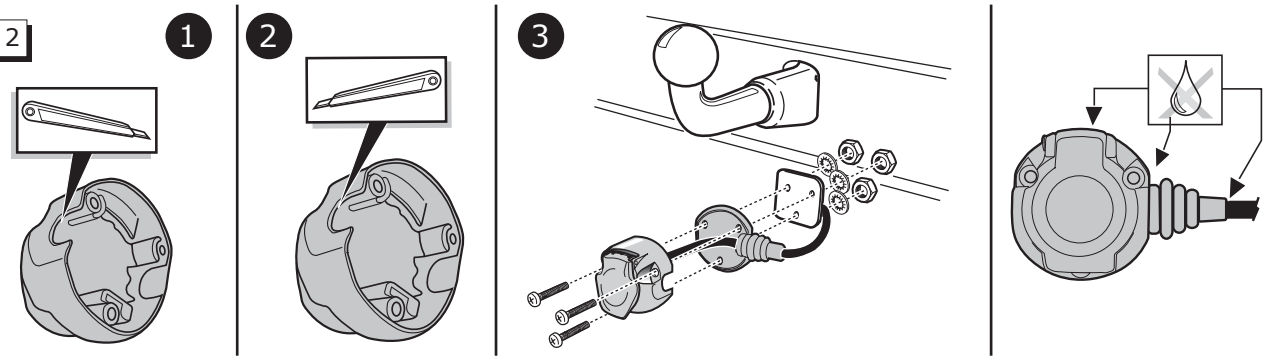

21

Duplex-Mode 2 - Without Coding (read-only)

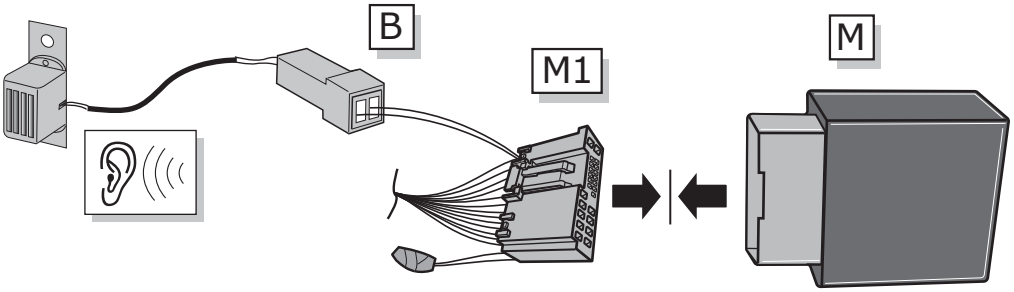

22

Right Connections UK Ltd
Unit 503 Queensway Business Park
TELFORD TF1 7UL UK

SALES: +44 (0)1952 608750 - Option 1
TECHNICAL: +44 (0)1952 608750 - Option 2

Web: www.rightconnections.co.uk
Email: Technical@rightconnect.co.uk

Revision: 1 / 23.07.2026
VW-305-13M

All models

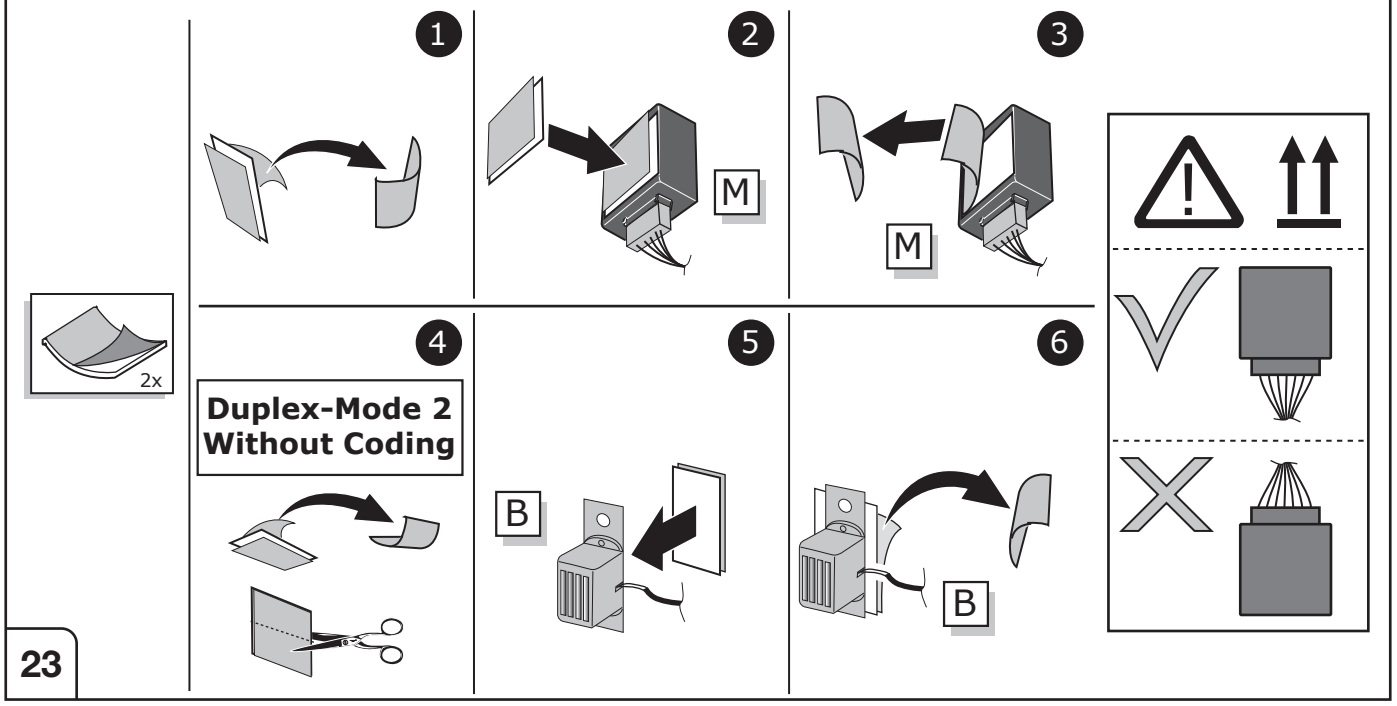

23

All models

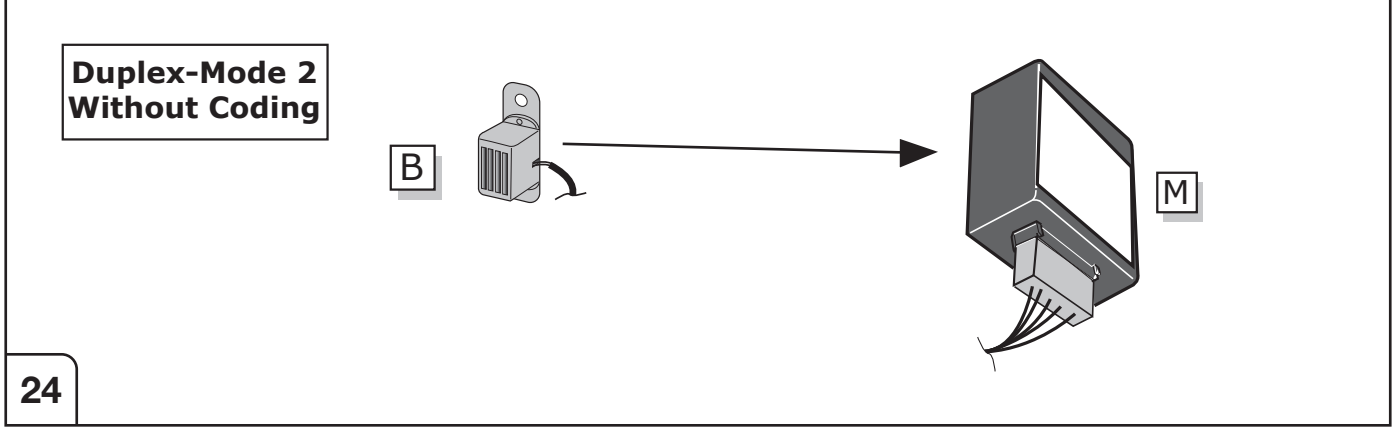

24

All models

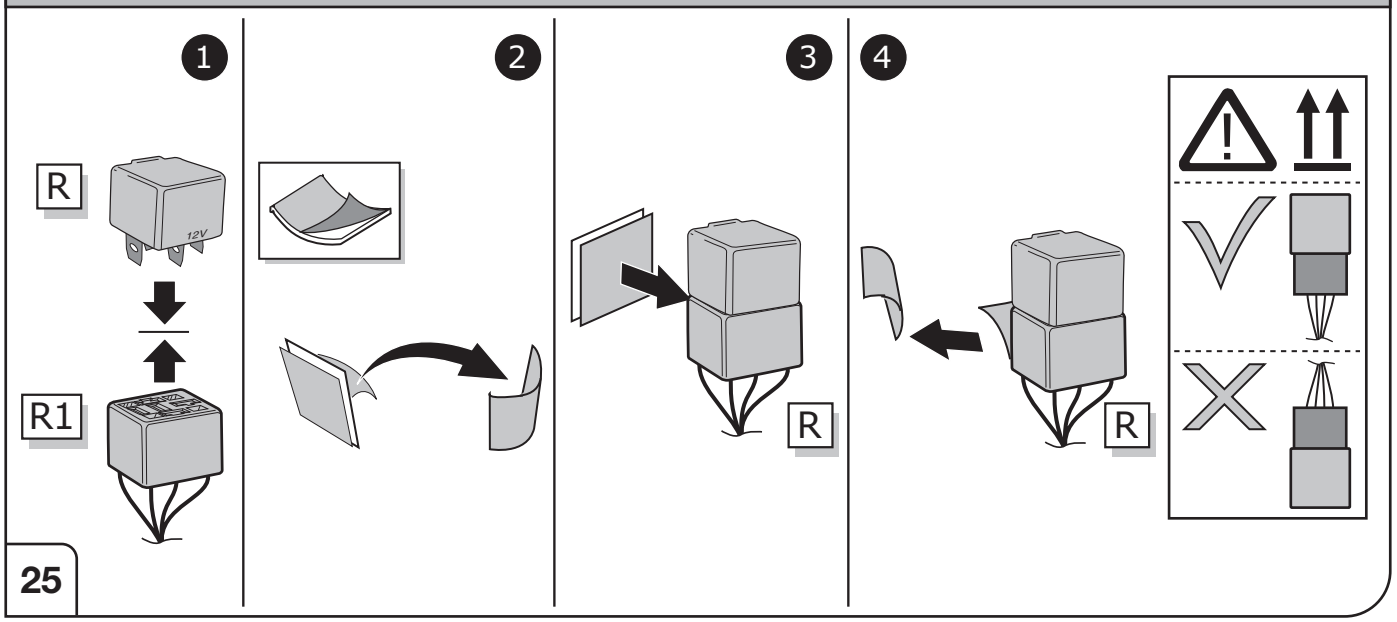

25

Right Connections UK Ltd
Unit 503 Queensway Business Park
TELFORD TF1 7UL UK

SALES: +44 (0)1952 608750 - Option 1
TECHNICAL: +44 (0)1952 608750 - Option 2

Web: www.rightconnections.co.uk
Email: Technical@rightconnect.co.uk

Revision: 1 / 23.07.2026
VW-305-13M

Arona

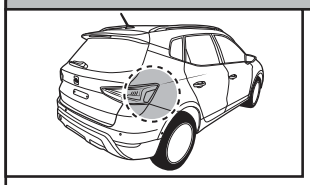

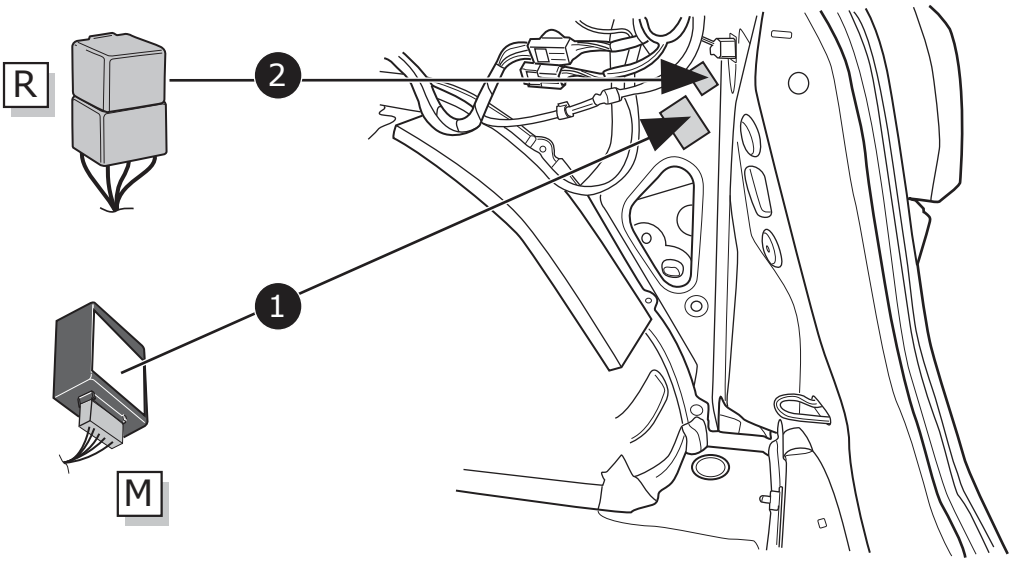

26

Arona

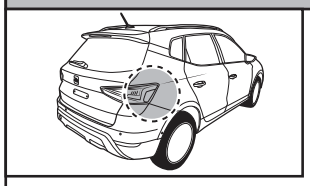

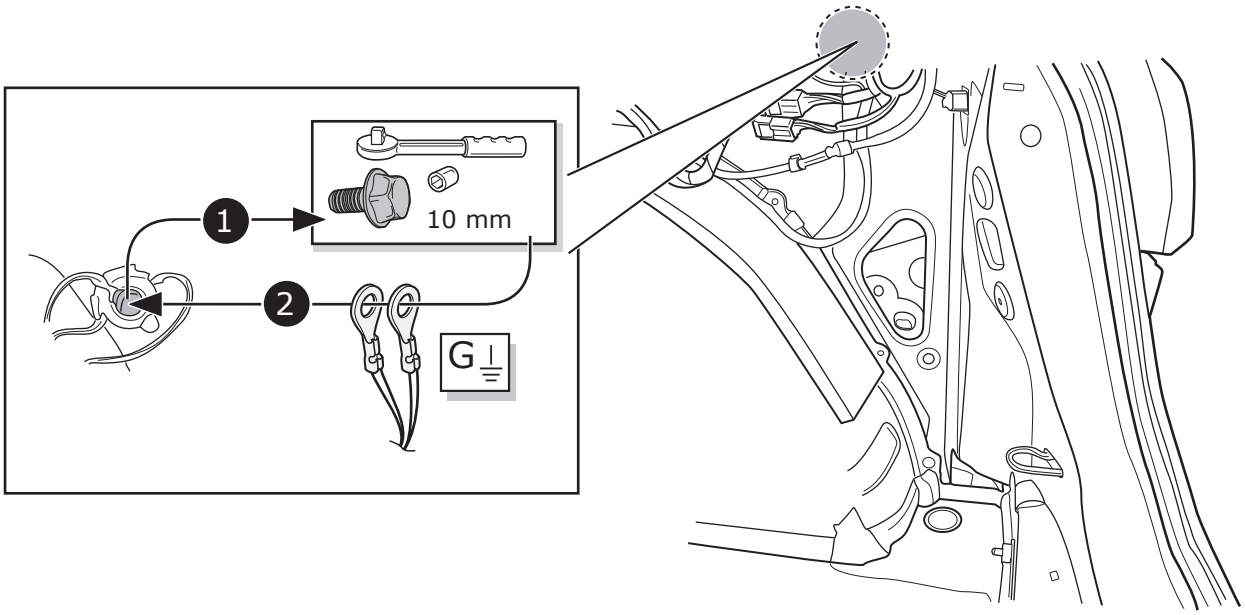

27

Right Connections UK Ltd
Unit 503 Queensway Business Park
TELFORD TF1 7UL UK

SALES: +44 (0)1952 608750 - Option 1
TECHNICAL: +44 (0)1952 608750 - Option 2

Web: www.rightconnections.co.uk
Email: Technical@rightconnect.co.uk

Revision: 1 / 23.07.2026
VW-305-13M

Ibiza

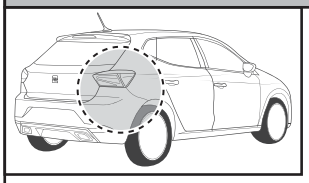

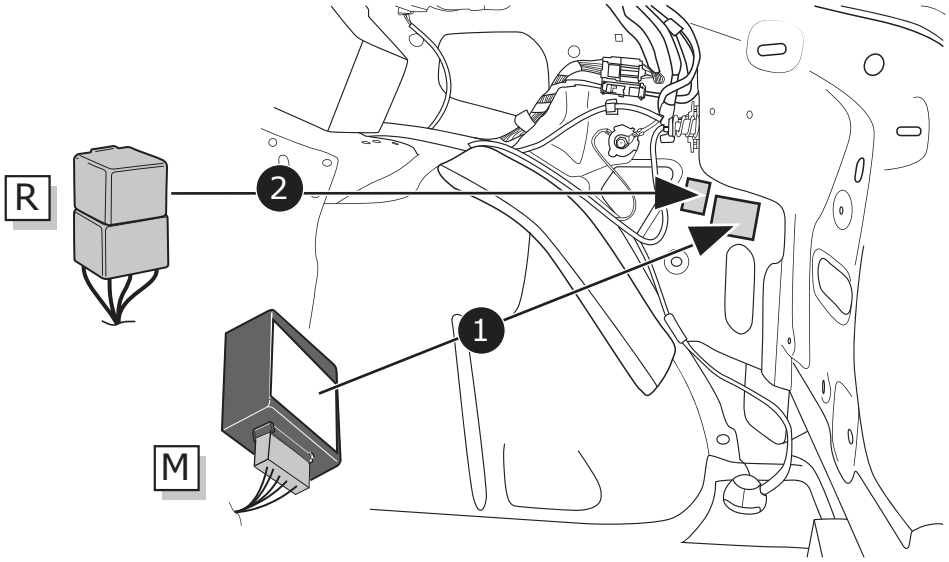

28

Ibiza

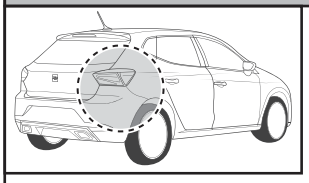

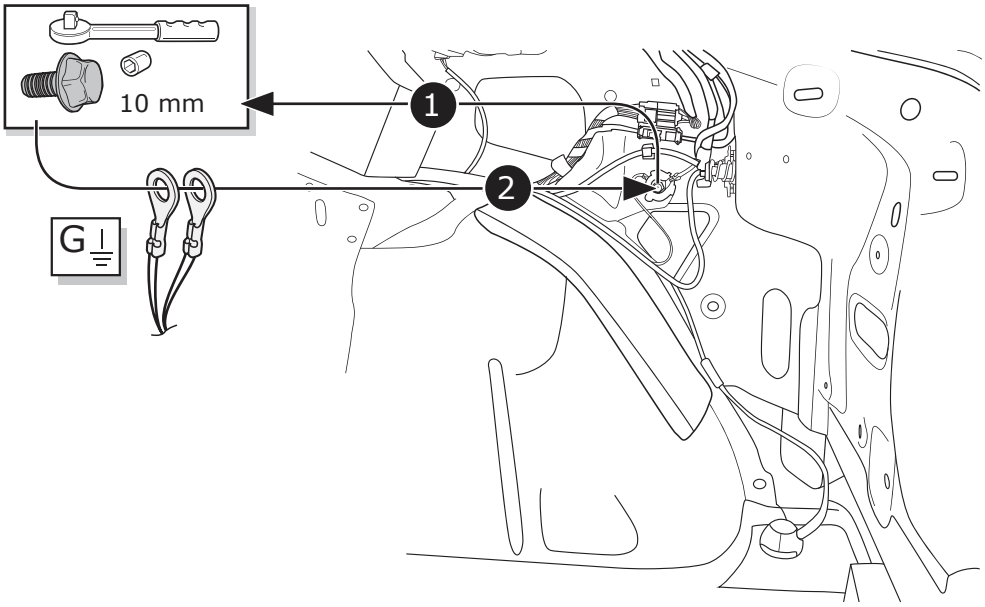

29

Right Connections UK Ltd
Unit 503 Queensway Business Park
TELFORD TF1 7UL UK

SALES: +44 (0)1952 608750 - Option 1
TECHNICAL: +44 (0)1952 608750 - Option 2

Web: www.rightconnections.co.uk
Email: Technical@rightconnect.co.uk

Revision: 1 / 23.07.2026
VW-305-13M

Fabia

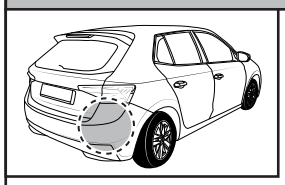

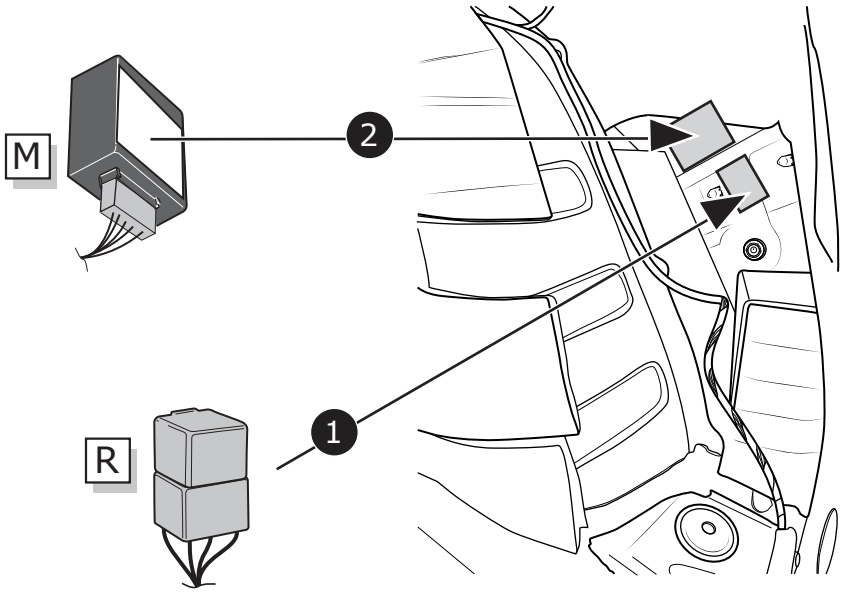

30

Fabia

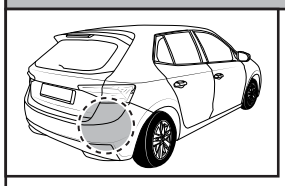

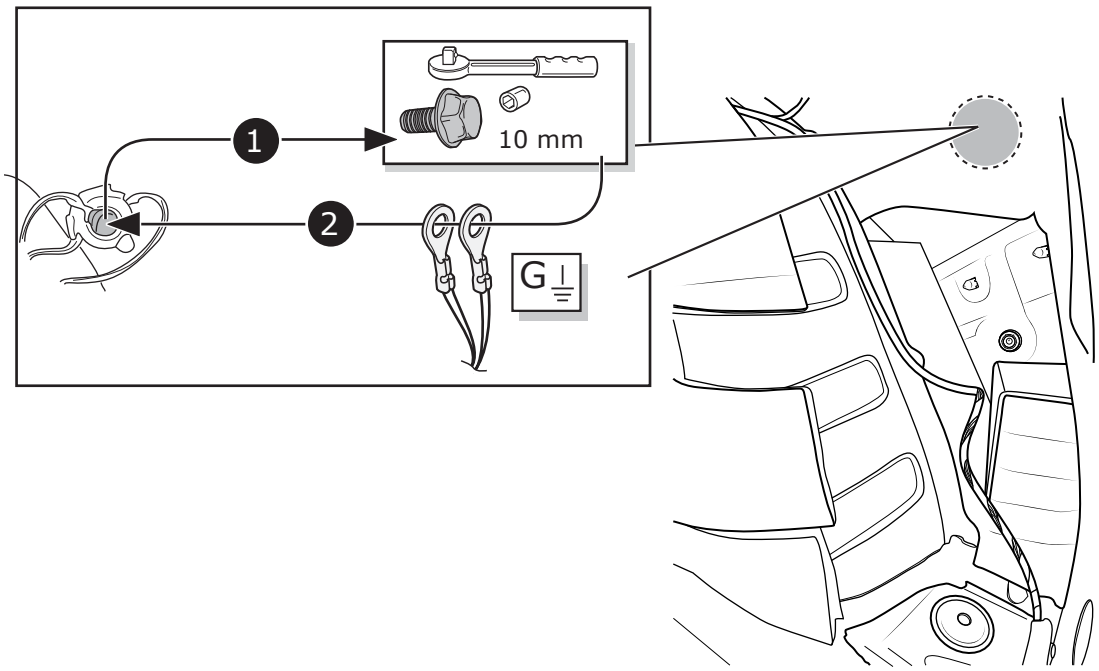

31

Right Connections UK Ltd
Unit 503 Queensway Business Park
TELFORD TF1 7UL UK

SALES: +44 (0)1952 608750 - Option 1
TECHNICAL: +44 (0)1952 608750 - Option 2

Web: www.rightconnections.co.uk
Email: Technical@rightconnect.co.uk

Revision: 1 / 23.07.2026
VW-305-13M

Ibiza

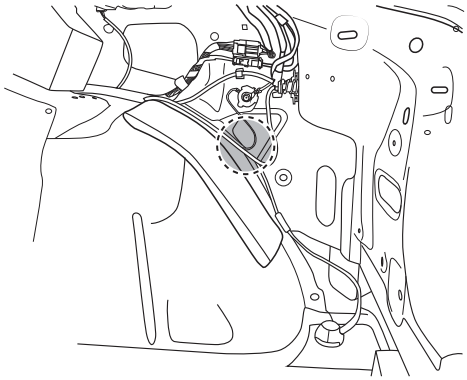

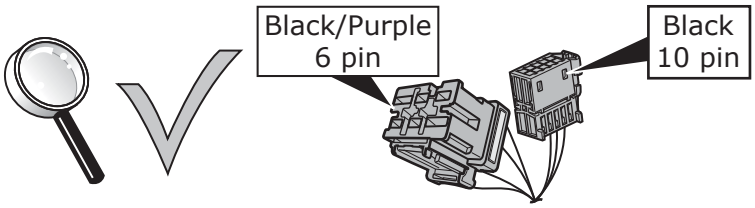

Vehicles **with** trailer preparation

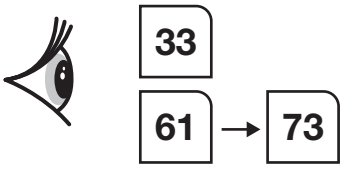

Arona

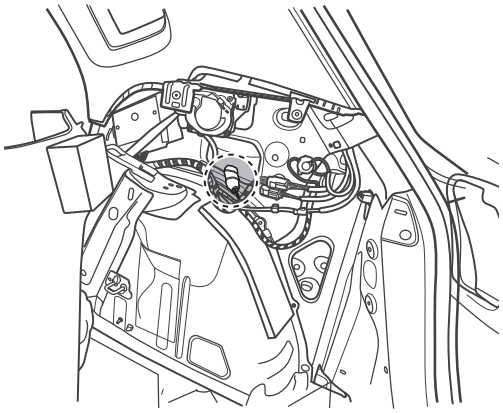

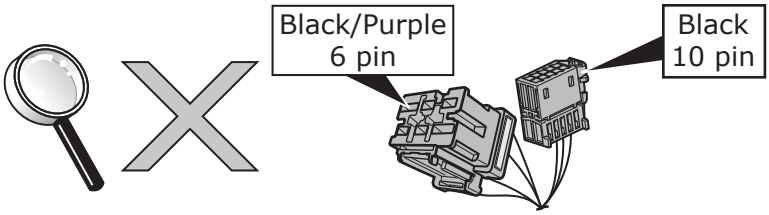

Fabia

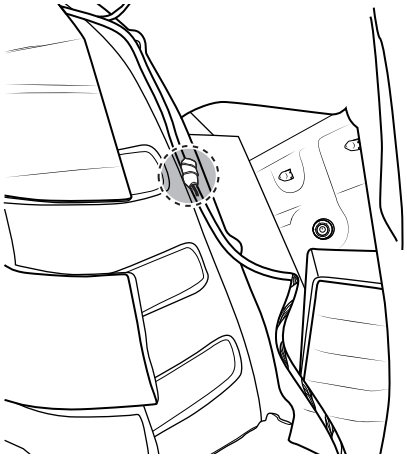

Vehicles **without** trailer preparation

32

Right Connections UK Ltd
Unit 503 Queensway Business Park
TELFORD TF1 7UL UK

SALES: +44 (0)1952 608750 - Option 1
TECHNICAL: +44 (0)1952 608750 - Option 2

Web: www.rightconnections.co.uk
Email: Technical@rightconnect.co.uk

Revision: 1 / 23.07.2026
VW-305-13M

Vehicles **with** trailer preparation

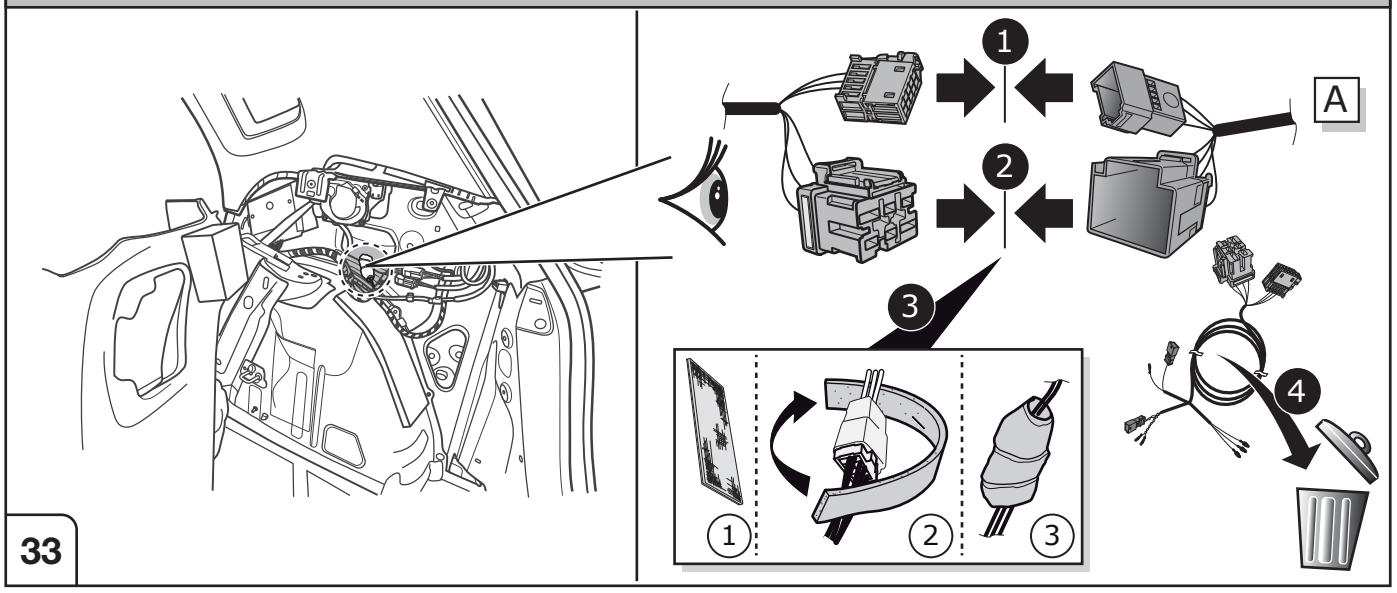

33

Vehicles **without** trailer preparation

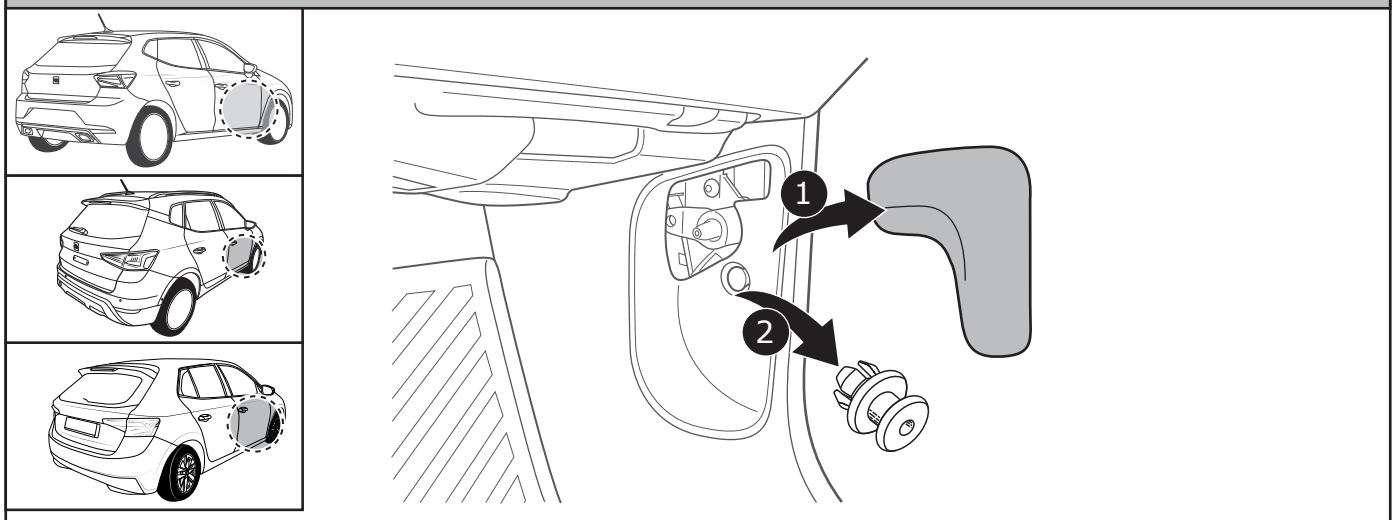

34

Vehicles **without** trailer preparation

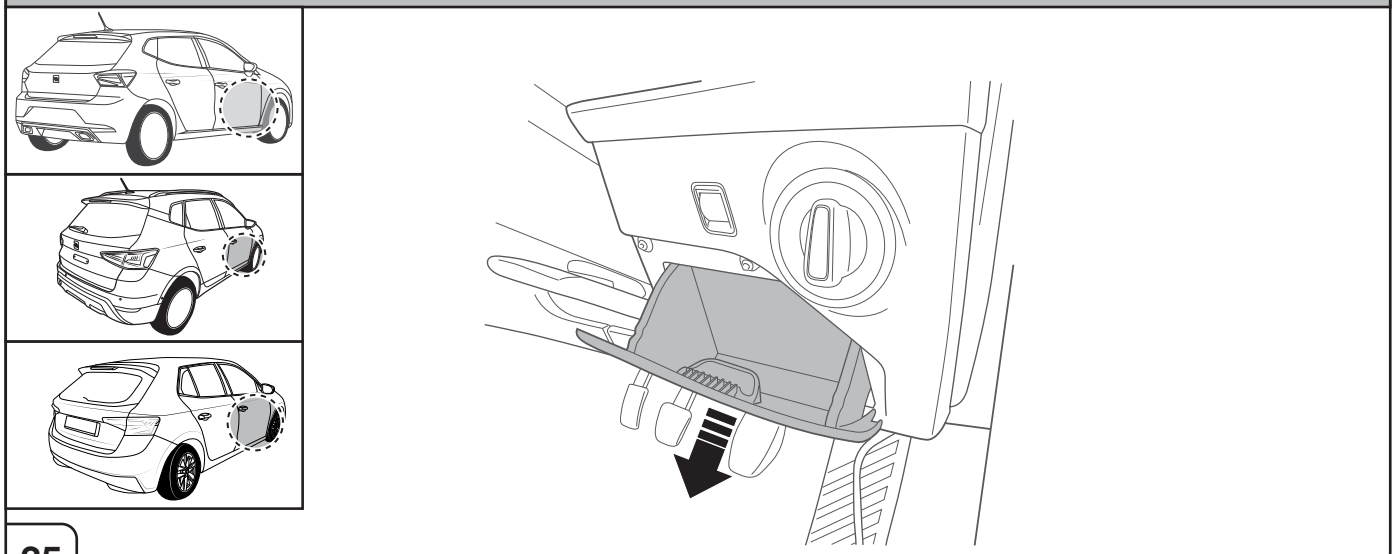

35

Right Connections UK Ltd
Unit 503 Queensway Business Park
TELFORD TF1 7UL UK

SALES: +44 (0)1952 608750 - Option 1
TECHNICAL: +44 (0)1952 608750 - Option 2

Web: www.rightconnections.co.uk
Email: Technical@rightconnect.co.uk

Revision: 1 / 23.07.2026
VW-305-13M

Vehicles **without** trailer preparation

Ibiza

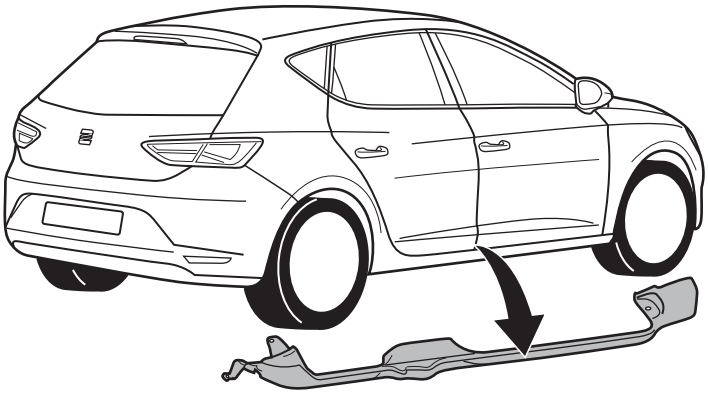

36

Vehicles **without** trailer preparation

Arona

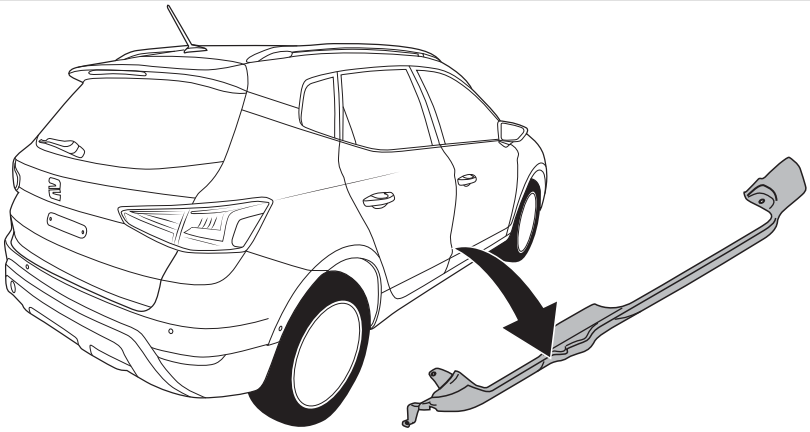

37

Vehicles **without** trailer preparation

Fabia

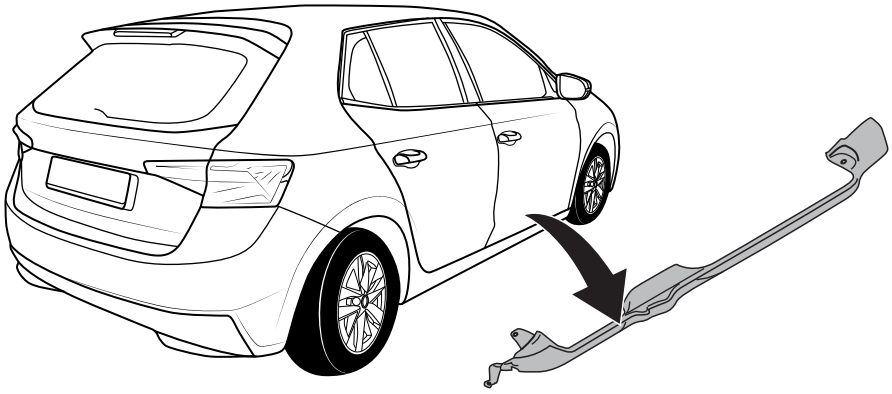

38

Vehicles **without** trailer preparation

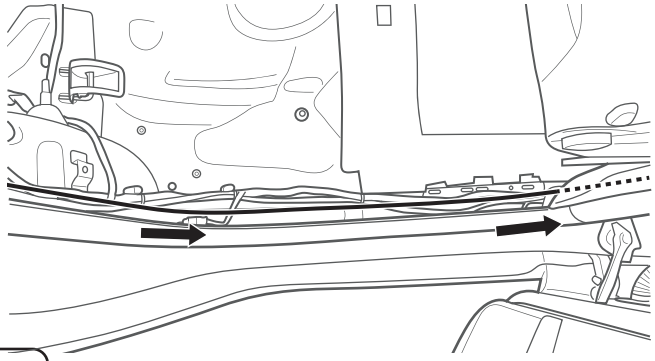

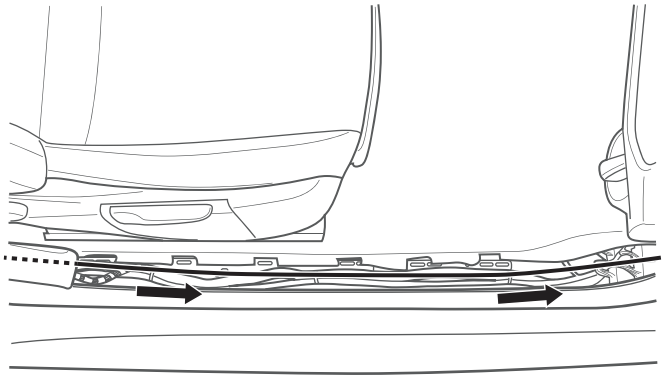

39

Right Connections UK Ltd
Unit 503 Queensway Business Park
TELFORD TF1 7UL UK

SALES: +44 (0)1952 608750 - Option 1
TECHNICAL: +44 (0)1952 608750 - Option 2

Web: www.rightconnections.co.uk
Email: Technical@rightconnect.co.uk

Revision: 1 / 23.07.2026
VW-305-13M

Vehicles **without** trailer preparation

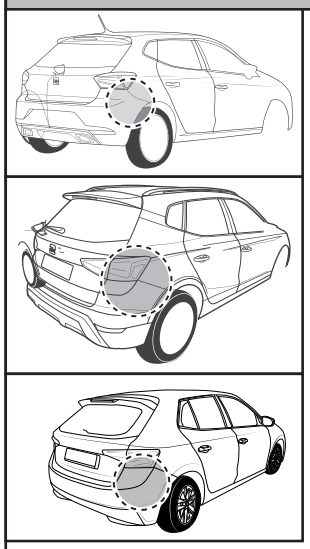

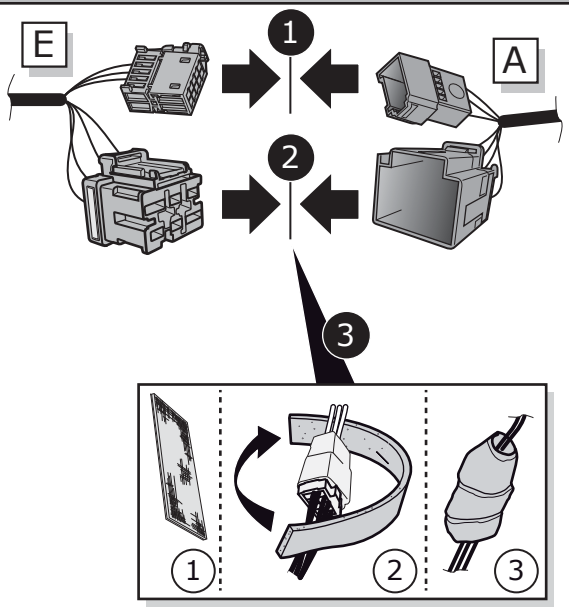

40

Vehicles **without** trailer preparation

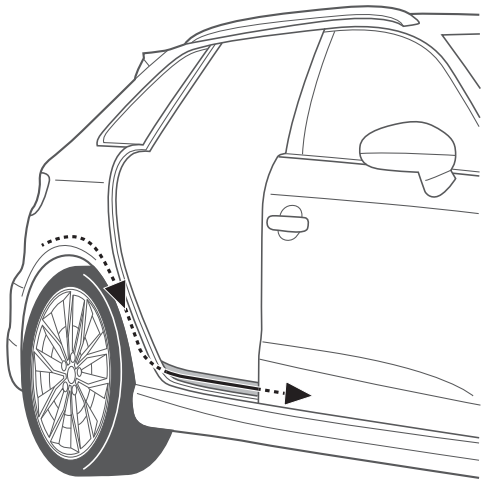

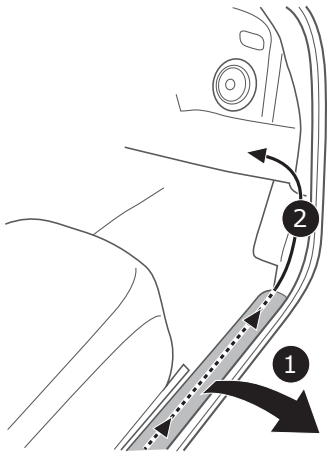

41

Vehicles **without** trailer preparation

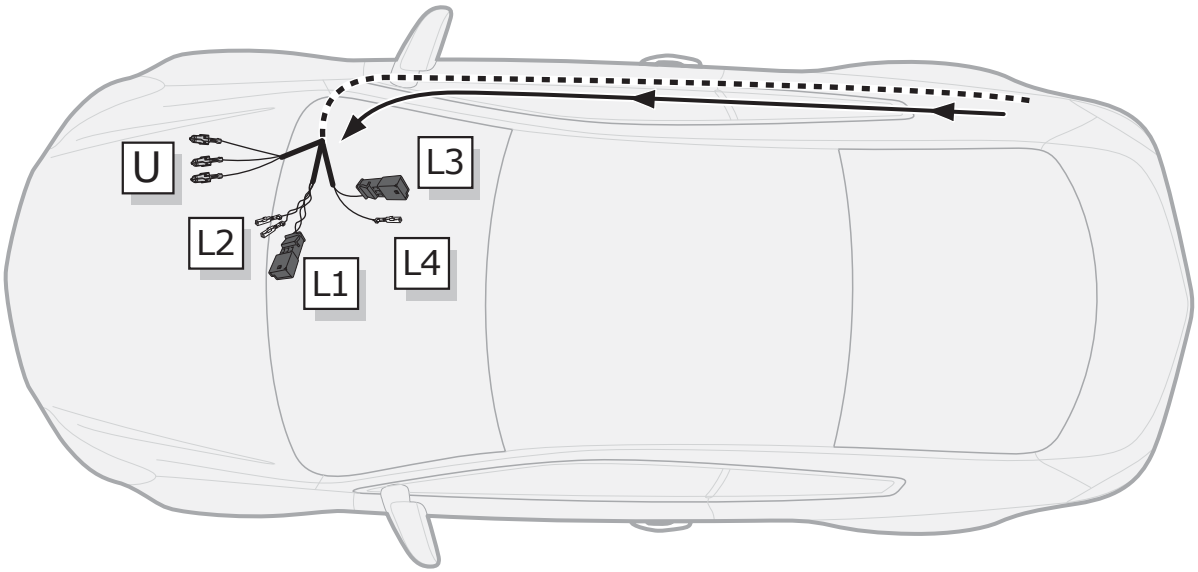

42

Right Connections UK Ltd
Unit 503 Queensway Business Park
TELFORD TF1 7UL UK

SALES: +44 (0)1952 608750 - Option 1
TECHNICAL: +44 (0)1952 608750 - Option 2

Web: www.rightconnections.co.uk
Email: Technical@rightconnect.co.uk

Revision: 1 / 23.07.2026
VW-305-13M

Vehicles **without** trailer preparation

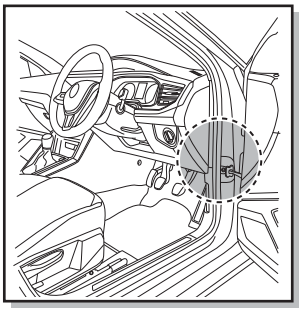

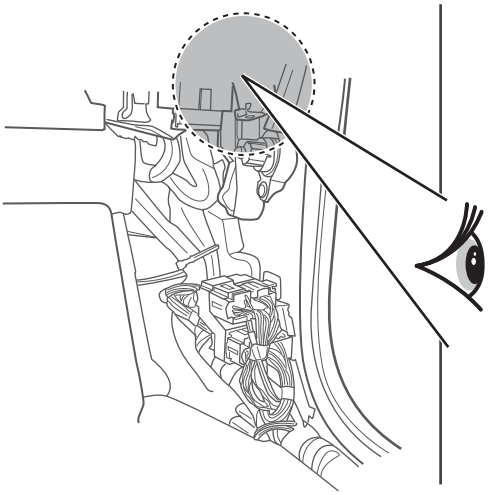

Body Control Module

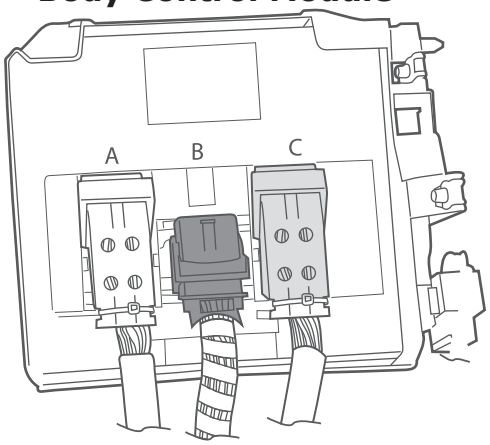

43

Vehicles **without** trailer preparation

CANbus
OPTION A

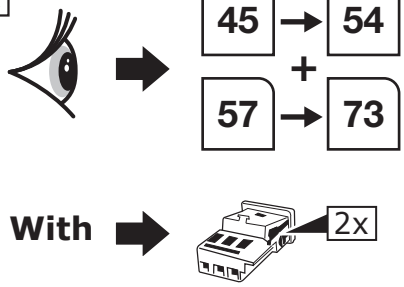

CANbus
OPTION B

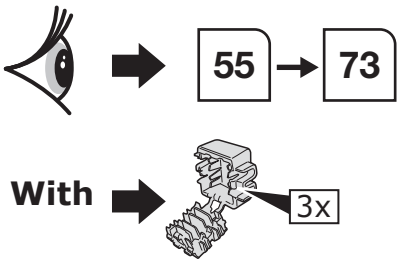

44

Vehicles **without** trailer preparation

CANbus
OPTION A

Body Control Module

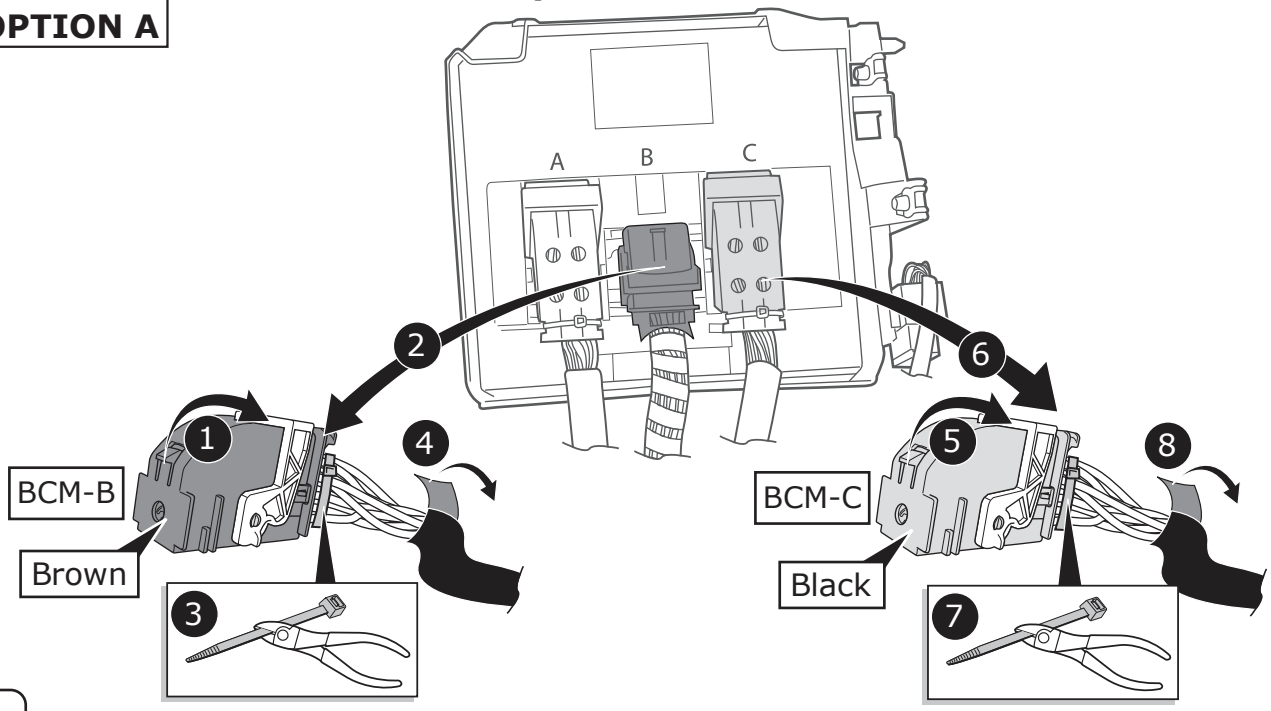

45

Right Connections UK Ltd
Unit 503 Queensway Business Park
TELFORD TF1 7UL UK

SALES: +44 (0)1952 608750 - Option 1
TECHNICAL: +44 (0)1952 608750 - Option 2

Web: www.rightconnections.co.uk
Email: Technical@rightconnect.co.uk

Revision: 1 / 23.07.2026
VW-305-13M

Vehicles **without** trailer preparation

CANbus
OPTION A

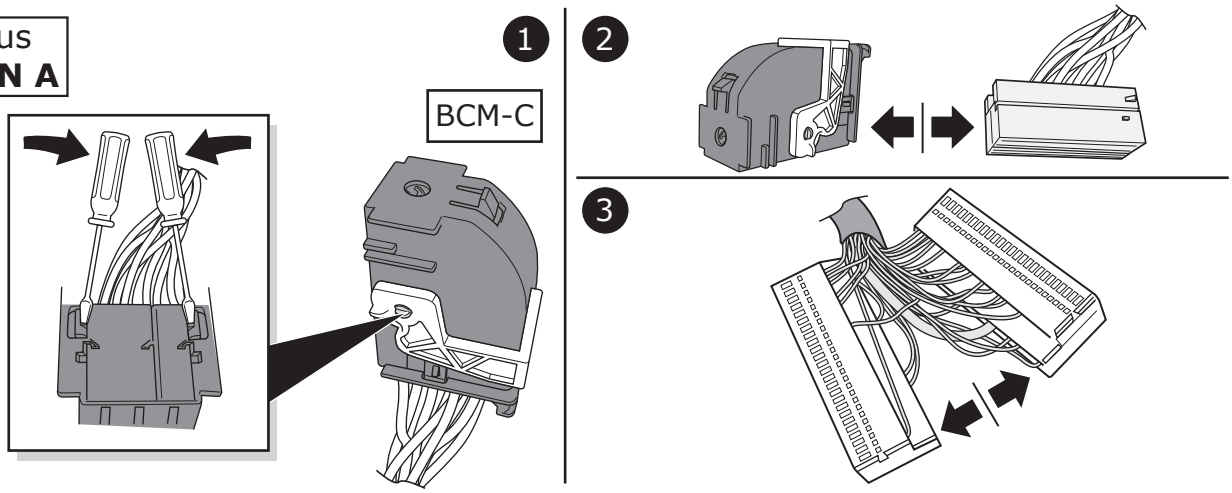

46

Vehicles **without** trailer preparation

CANbus
OPTION A

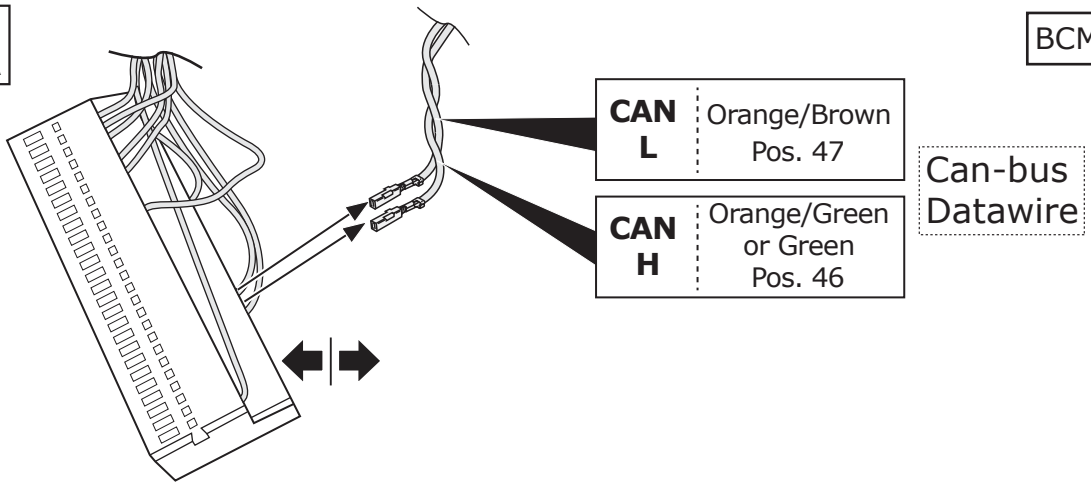

47

Vehicles **without** trailer preparation

CANbus
OPTION A

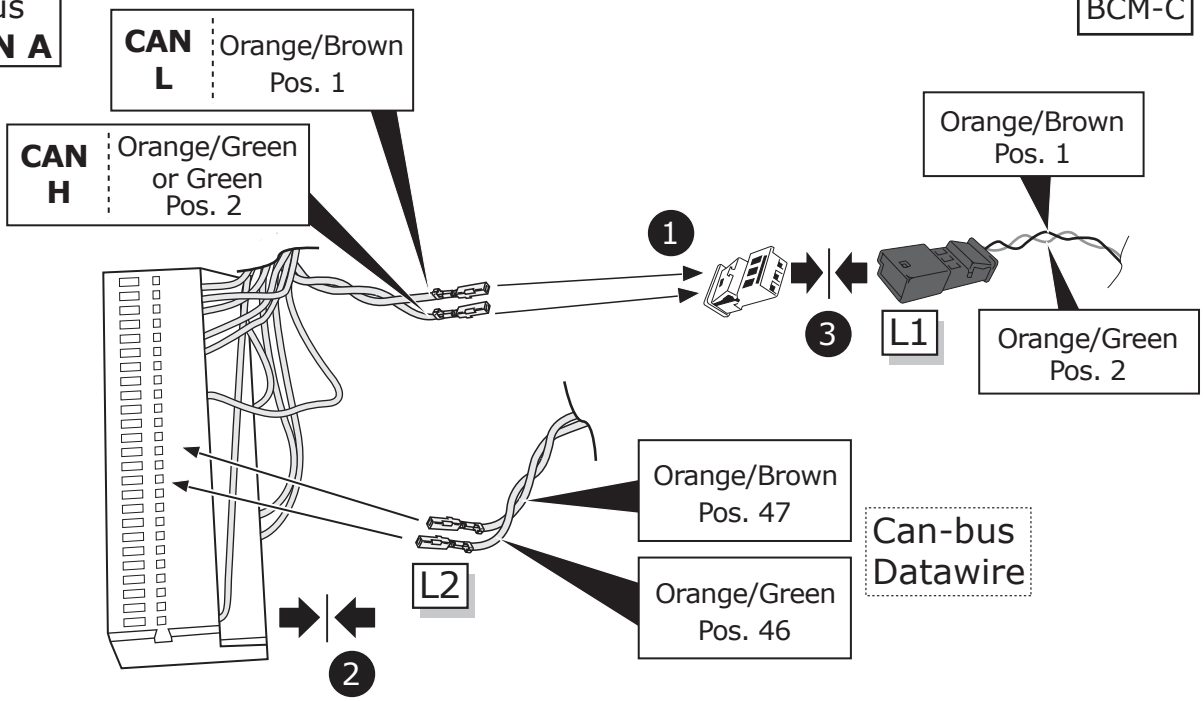

48

Right Connections UK Ltd
Unit 503 Queensway Business Park
TELFORD TF1 7UL UK

SALES: +44 (0)1952 608750 - Option 1
TECHNICAL: +44 (0)1952 608750 - Option 2

Web: www.rightconnections.co.uk
Email: Technical@rightconnect.co.uk

Revision: 1 / 23.07.2026
VW-305-13M

Vehicles **without** trailer preparation

CANbus
OPTION A

BCM-C

1

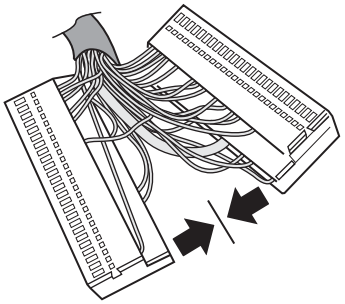

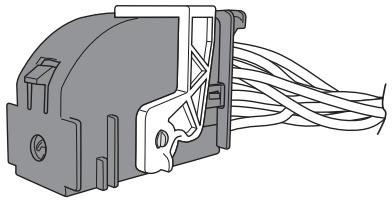

2

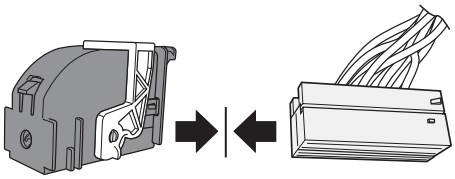

49

Vehicles **without** trailer preparation

CANbus
OPTION A

1

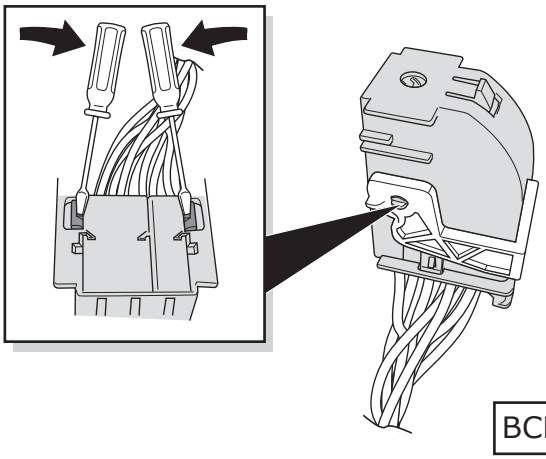

BCM-B

2

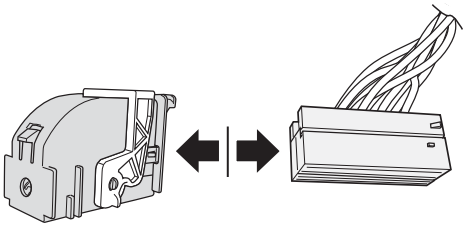

3

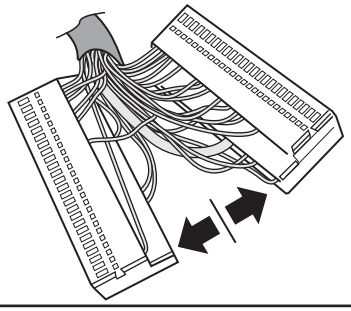

50

Vehicles **without** trailer preparation

CANbus
OPTION A

BCM-B

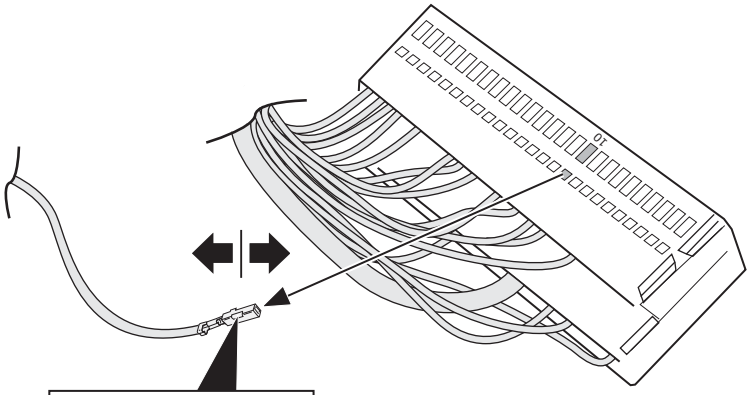

STOP	Black/Red or Black Pos. 10

51

Right Connections UK Ltd
Unit 503 Queensway Business Park
TELFORD TF1 7UL UK

SALES: +44 (0)1952 608750 - Option 1
TECHNICAL: +44 (0)1952 608750 - Option 2

Web: www.rightconnections.co.uk
Email: Technical@rightconnect.co.uk

Revision: 1 / 23.07.2026
VW-305-13M

Vehicles **without** trailer preparation

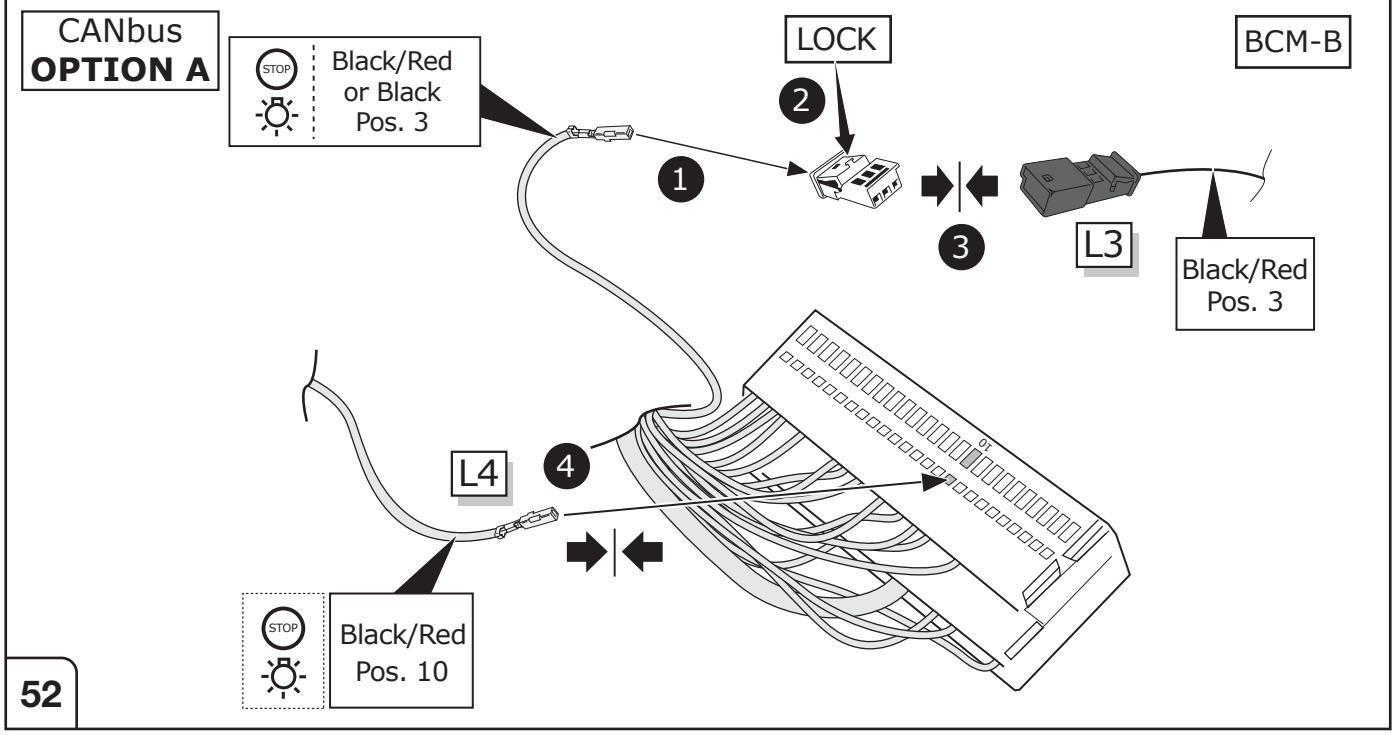

52

Vehicles **without** trailer preparation

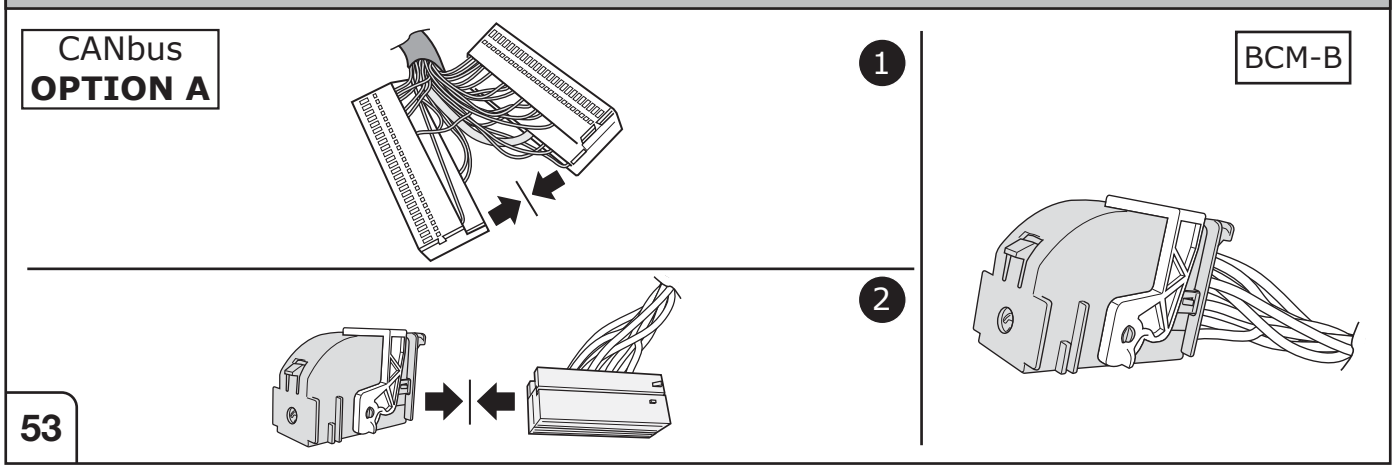

53

Vehicles **without** trailer preparation

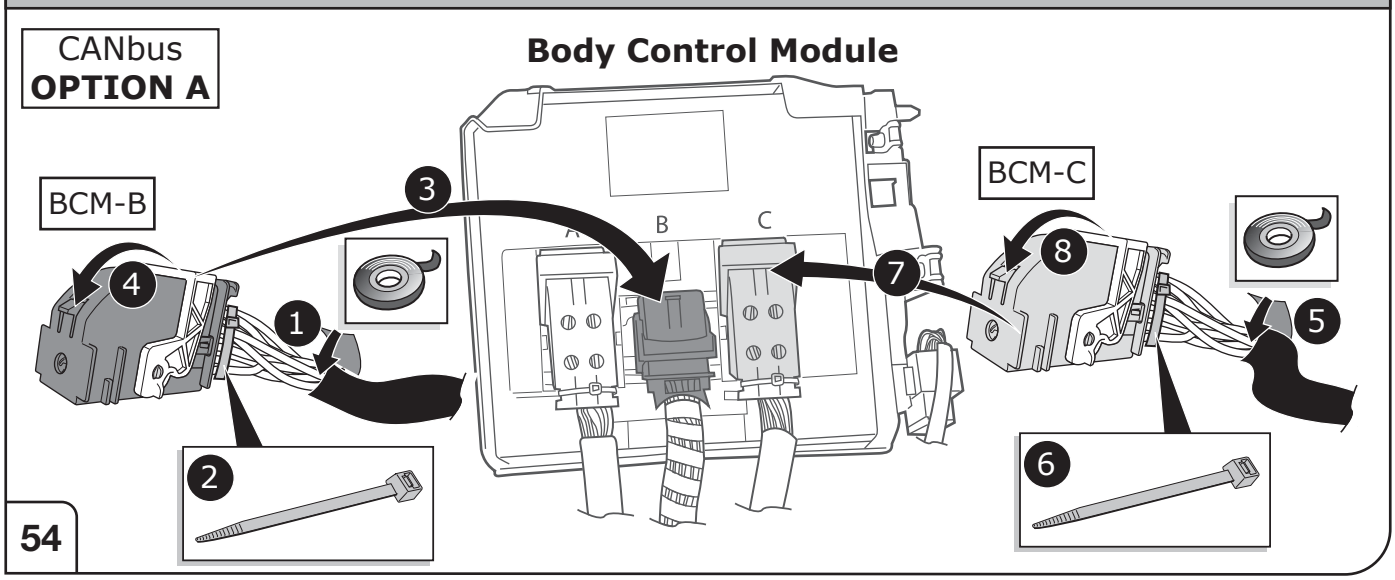

54

Right Connections UK Ltd
Unit 503 Queensway Business Park
TELFORD TF1 7UL UK

SALES: +44 (0)1952 608750 - Option 1
TECHNICAL: +44 (0)1952 608750 - Option 2

Web: www.rightconnections.co.uk
Email: Technical@rightconnect.co.uk

Revision: 1 / 23.07.2026
VW-305-13M

Vehicles **without** trailer preparation

CANbus
OPTION B

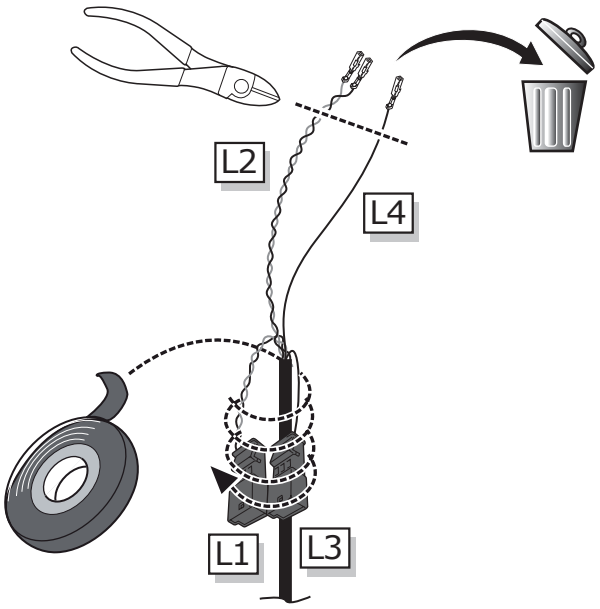

55

Vehicles **without** trailer preparation

CANbus
OPTION B

Body Control Module

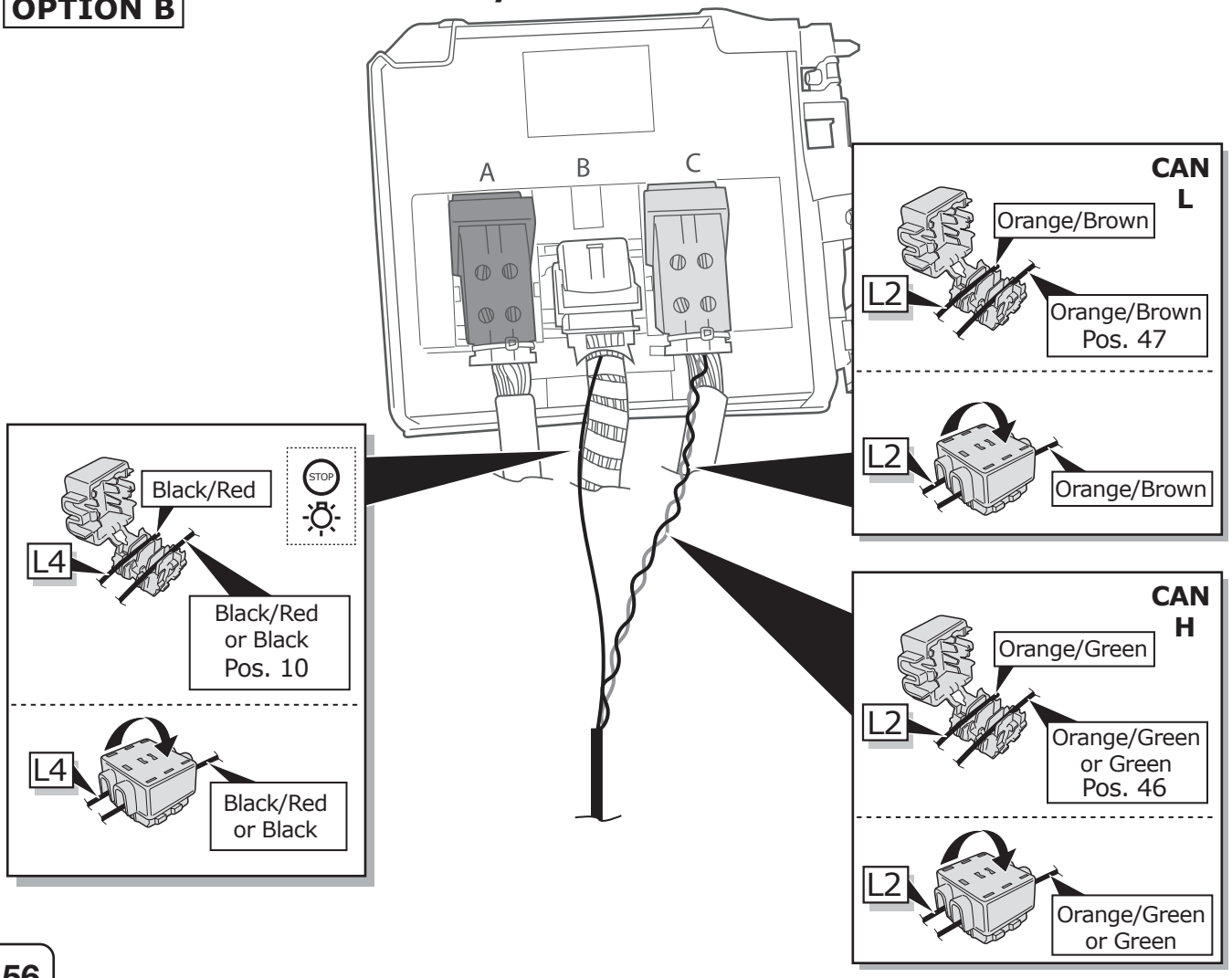

56

Right Connections UK Ltd
Unit 503 Queensway Business Park
TELFORD TF1 7UL UK

SALES: +44 (0)1952 608750 - Option 1
TECHNICAL: +44 (0)1952 608750 - Option 2

Web: www.rightconnections.co.uk
Email: Technical@rightconnect.co.uk

Revision: 1 / 23.07.2026
VW-305-13M

Vehicles **without** trailer preparation

Fuse box option A

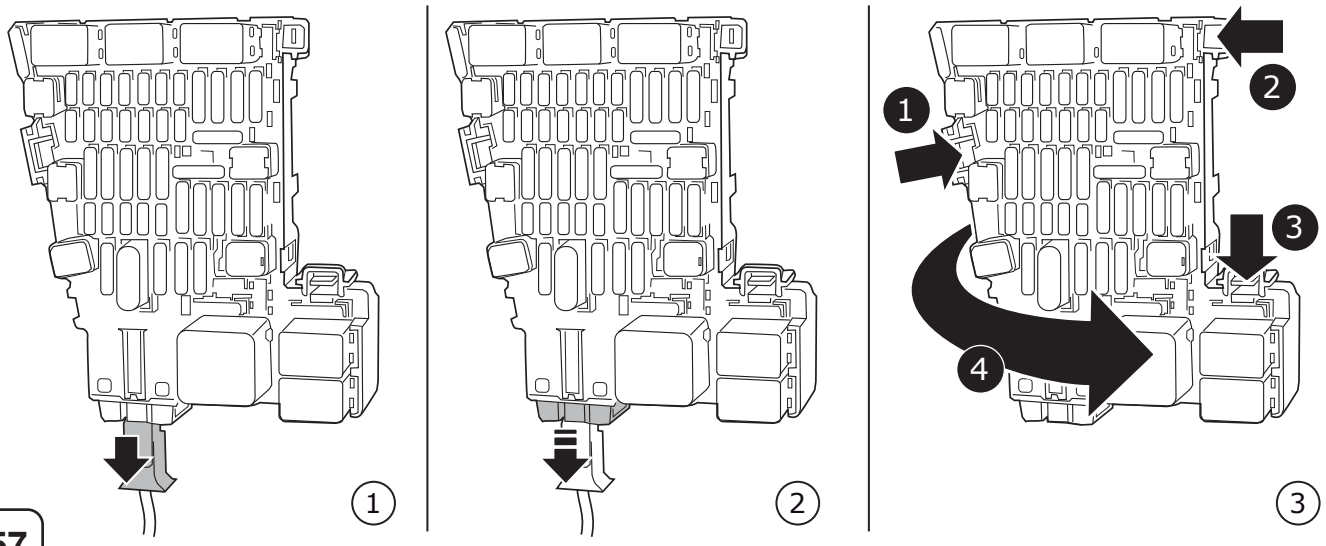

57

Vehicles **without** trailer preparation

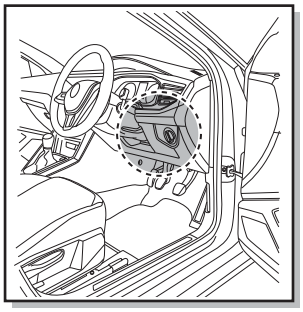

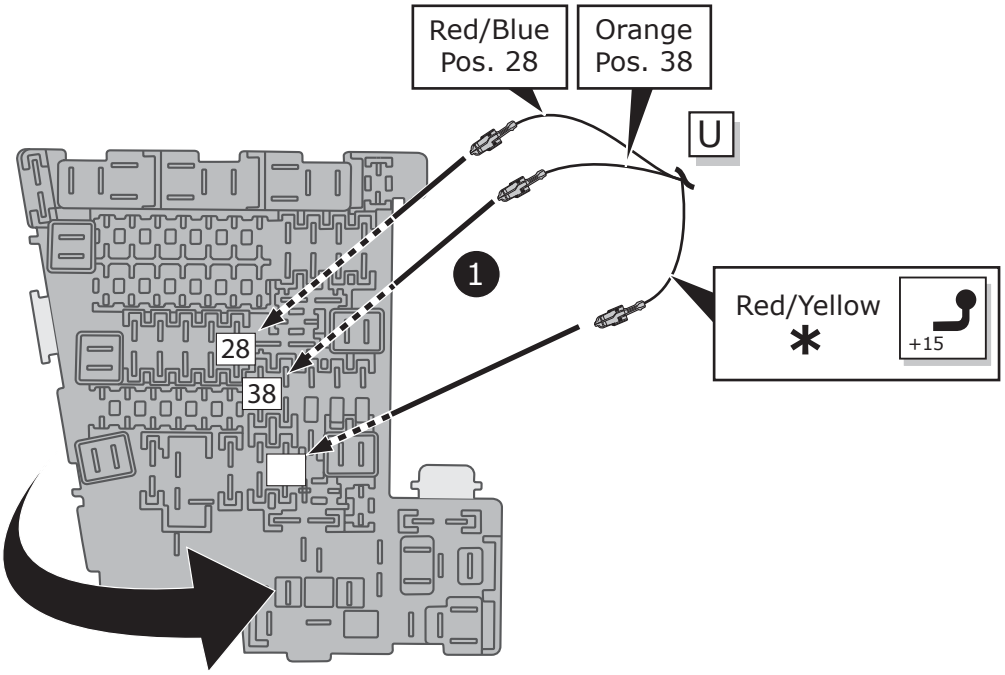

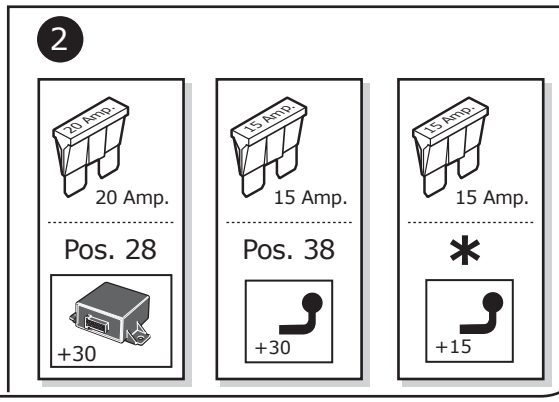

∗ Choose free pos. B+30

58

Right Connections UK Ltd
Unit 503 Queensway Business Park
TELFORD TF1 7UL UK

SALES: +44 (0)1952 608750 - Option 1
TECHNICAL: +44 (0)1952 608750 - Option 2

Web: www.rightconnections.co.uk
Email: Technical@rightconnect.co.uk

Revision: 1 / 23.07.2026
VW-305-13M

Vehicles **without** trailer preparation

Fuse box option B

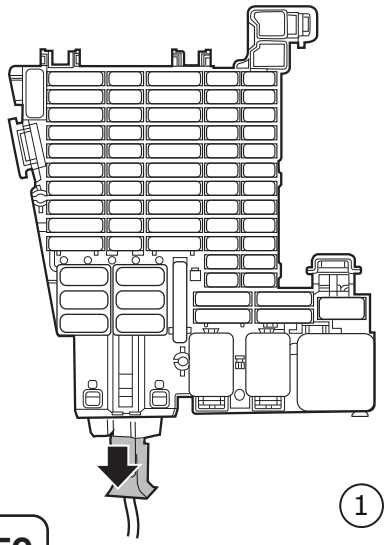

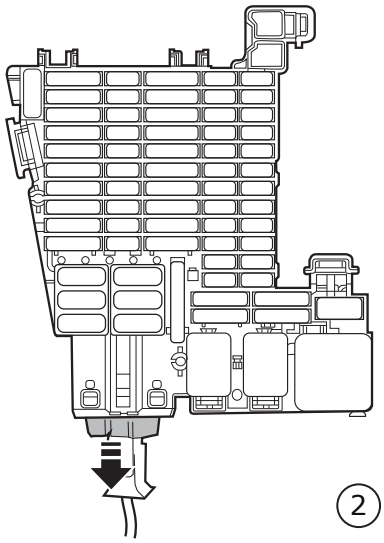

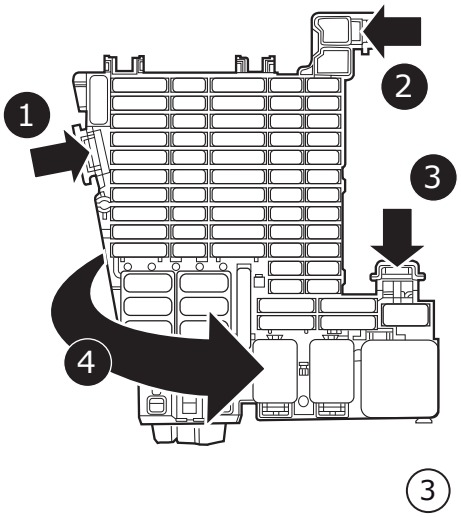

59

Vehicles **without** trailer preparation

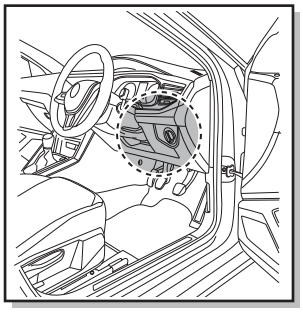

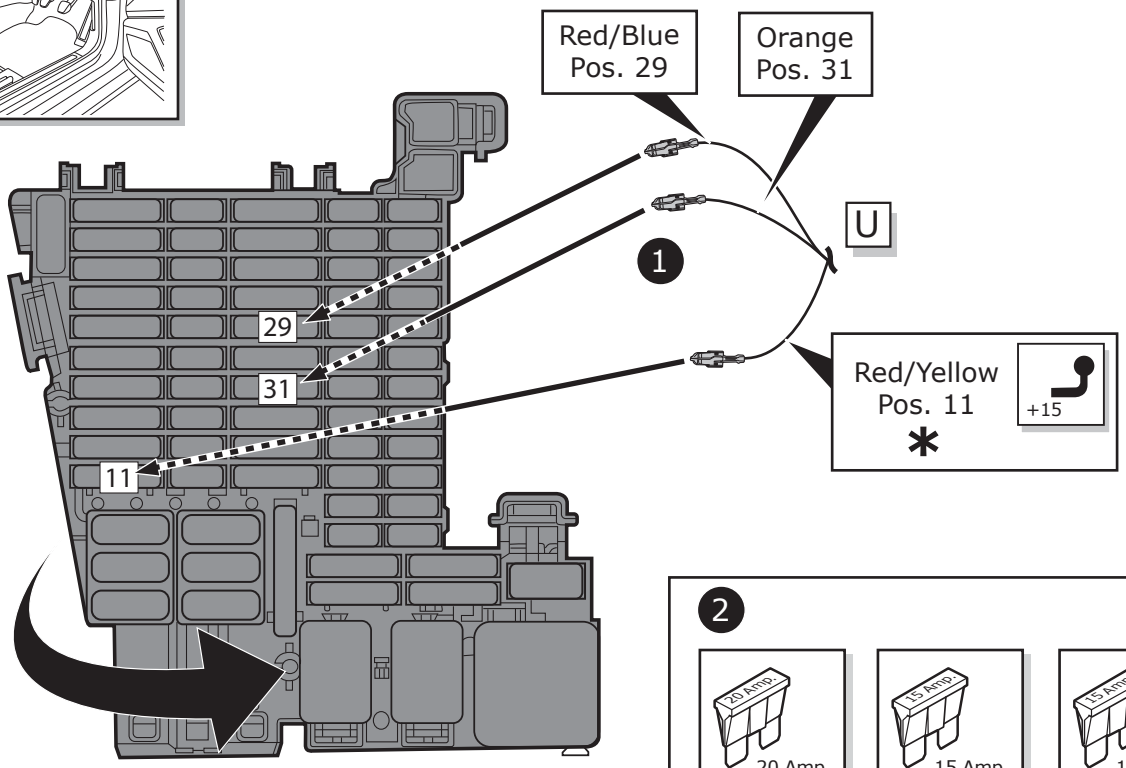

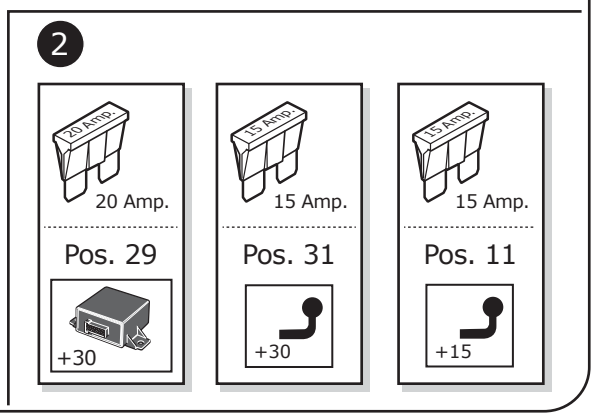

*** If pos. 11 is taken, choose free pos. B+30**

60

Right Connections UK Ltd
Unit 503 Queensway Business Park
TELFORD TF1 7UL UK

SALES: +44 (0)1952 608750 - Option 1
TECHNICAL: +44 (0)1952 608750 - Option 2

Web: www.rightconnections.co.uk
Email: Technical@rightconnect.co.uk

Revision: 1 / 23.07.2026
VW-305-13M

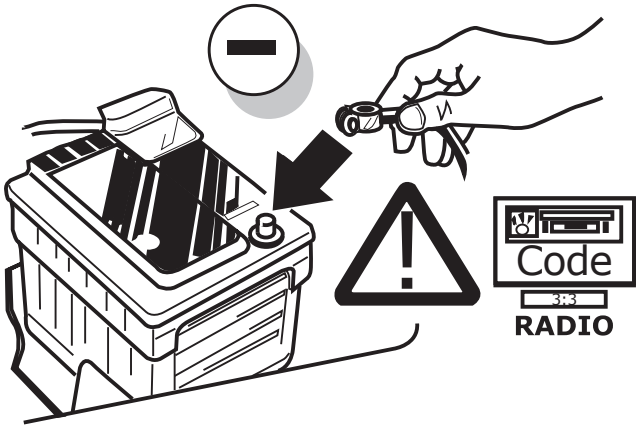

61

Optional

Right Connections
towbar wiring kits for the uk

Trailer Simulator for 7- and 13-pin Sockets

62

Duplex-Mode 1 - With Coding (read/write)

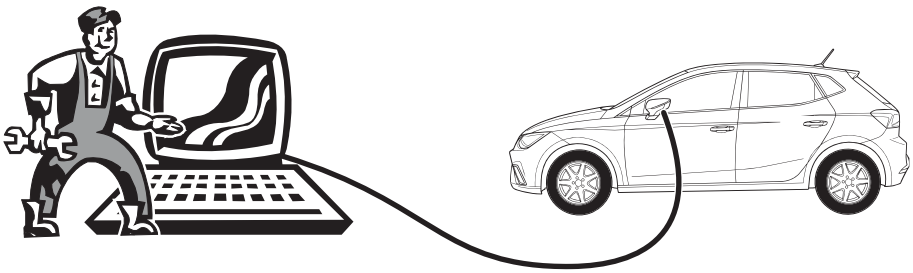

Diagnostic services and methods (local offline):

Please note:

Always use the latest diagnostic version!
The vehicle to be coded must be supported by the diagnostic service provider and already be implemented in the diagnostics version!
Please contact your diagnostic service provider in case of any question.

ATTENTION!

Model year 2021 vehicles are equipped with a so-called vehicle diagnosis protection (SFD). Make sure that access to locked on-board control units is granted by thediagnostic system.
Possible diagnostic service providers:

- ODIS (page 28)
- JIFELINE

63

Right Connections UK Ltd
Unit 503 Queensway Business Park
TELFORD TF1 7UL UK

SALES: +44 (0)1952 608750 - Option 1
TECHNICAL: +44 (0)1952 608750 - Option 2

Web: www.rightconnections.co.uk
Email: Technical@rightconnect.co.uk

Revision: 1 / 23.07.2026
VW-305-13M

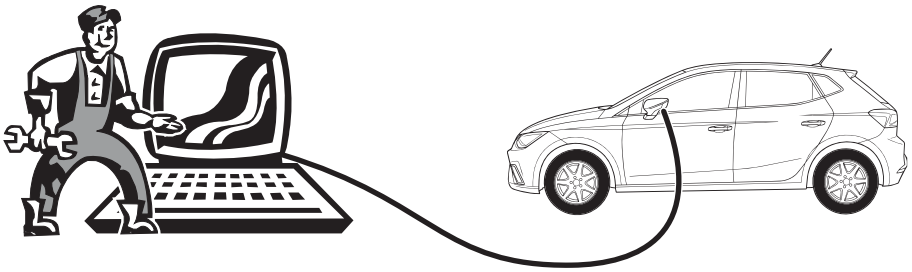

Complete Diagnostics
remote diagnostic & coding solutions
Call Hotline +44 (0)1952 608 750 - Option 4

CODING WITH ODIS

Please note:

The procedure described below for encoding and enabling the trailer mode only serves for a general orientation and can vary greatly depending on the model (motorisation / equipment). If necessary less or further control units will have to be adapted.

After connecting to ODIS, the "69 trailer function" controller has to be set to encoded in the target installation list.

The following may be necessary in the further course of work:

***EZE_09* (electronic central electric controller):**
Diagnosis
(possible login code: 31347)
Networking plan
Controller self-diagnosis
Encode
Trailer connection device ›installed
or: hitch_ecu ›installed

Alternative encoding EZE_09 as follows (MY 2017 >>):
Self diagnose control unit
Access authorization ›31347
Adjustment
Integration
Trailer control unit > installed

***ZKS_46* (Central module convenience system)**
trailer monitoring ›put on active
trailer control unit ›installed

***SWA_3C* (Lane Change Assist)**
ECU for draw bar ›with ECU for draw bar

***SW2_CF* (Lane Change Assist2)**
ECU for draw bar ›with ECU for draw bar

***SCH_17* (Dash panel insert)**
Trailer ›yes

***RFK_6C* (reverse camera system)**
equipment_ahk ›installed

***STF_74* (chassis control system)**
Trailer ›installed

***EPH_76* (PDC controller)**
Trailer ›trailer device can be removed manually

DIS_13 (controller distance control
(possible login code: 20103)
Control module for towing sens ›installed

***Alternative encoding DIS_13* as follows:**
Self diagnose control unit
Access authorization ›20103
Encoding
Binary encoding
Byte 3
Binary ›xxxx**1**xxx
or Hex ›+**8**
03 Brake electronics
Acces authorisation > 61378
Adjustments
Trailer stability >Active

***FFF_A5* (front sensor system controller)**
AAG ›coded

***HDE_6D* (boot lid electronics controller)**
Trailer ›installed

Encoding AST_7E (Driver display unit)
Encoding
Trailer ➔ on

Important note on encoding and activating in trailer mode
The aforementioned settings are carried out in the vehicle's electrical system and saved locally. During general updates for the vehicle software (for example, within the scope of service or repair work), the settings may be overwritten and deleted under certain circumstances. In this case, the trailer mode activation has to be updated again locally after the update. Diagnostic information relating to the trailer mode that may appear during variance comparisons with the data saved in the manufacturer's works, may form the basis of the local activation.

Right Connections UK Ltd
Unit 503 Queensway Business Park
TELFORD TF1 7UL UK

SALES: +44 (0)1952 608750 - Option 1
TECHNICAL: +44 (0)1952 608750 - Option 2

Web: www.rightconnections.co.uk
Email: Technical@rightconnect.co.uk

Revision: 1 / 23.07.2026
VW-305-13M

Functional test

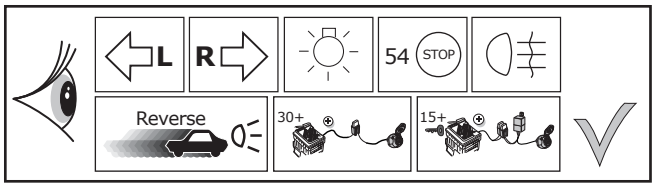

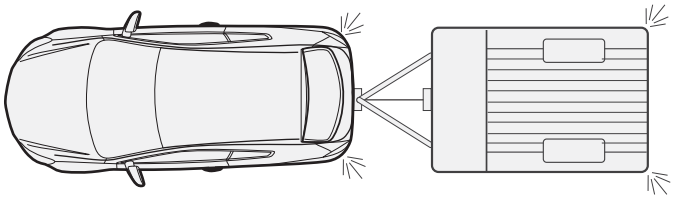

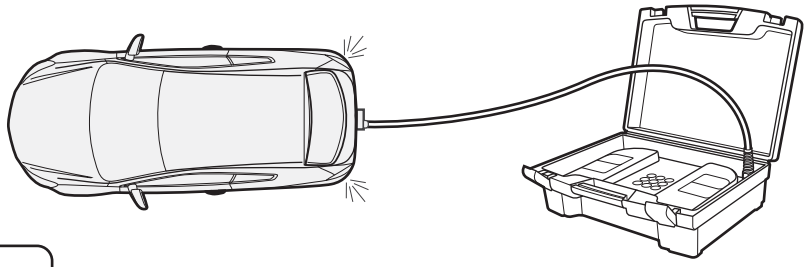

65

Duplex-Mode 1 - With Coding (read/write)

INFO

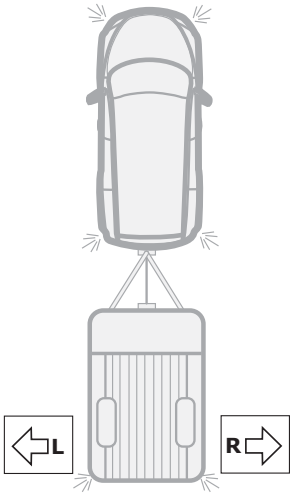

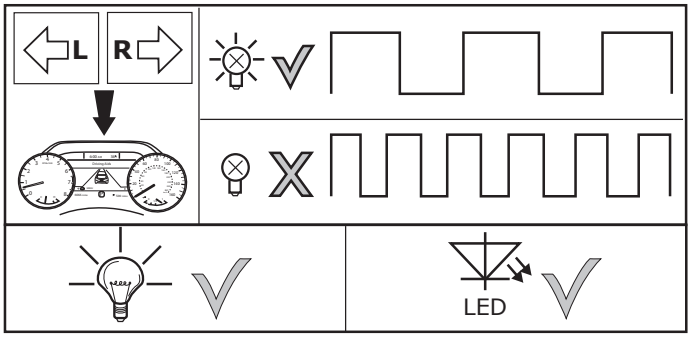

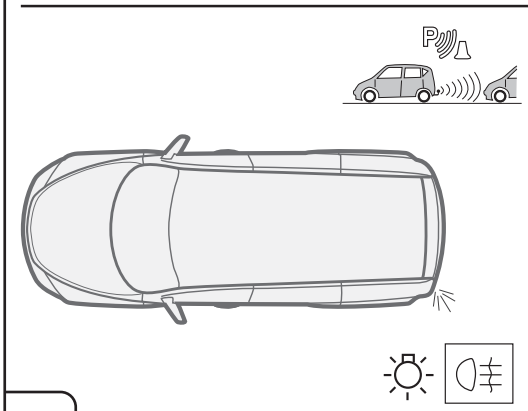

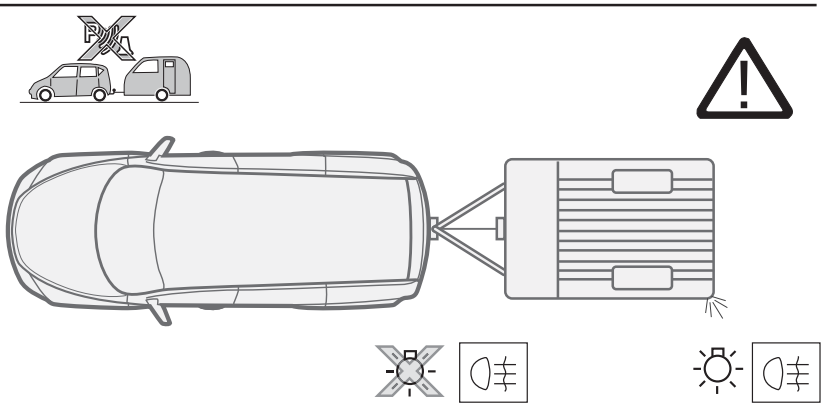

66

Right Connections UK Ltd
Unit 503 Queensway Business Park
TELFORD TF1 7UL UK

SALES: +44 (0)1952 608750 - Option 1
TECHNICAL: +44 (0)1952 608750 - Option 2

Web: www.rightconnections.co.uk
Email: Technical@rightconnect.co.uk

Revision: 1 / 23.07.2026
VW-305-13M

Duplex-Mode 2 - Without Coding (read-only)

Rear fog light cut-off is not supported!

PDC to be deactivated manually!

Rear Collission Avoidance Systems to be deactivated manually!

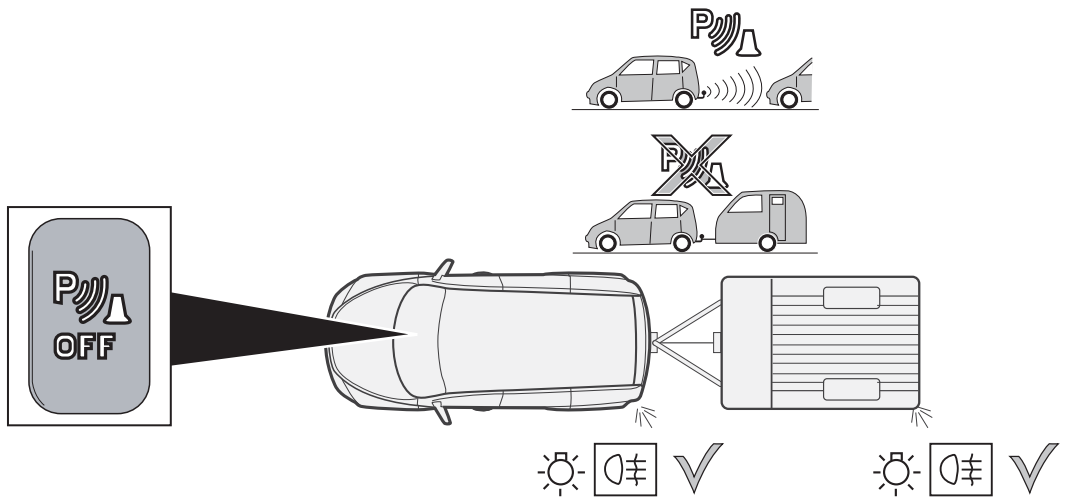

67

INFO

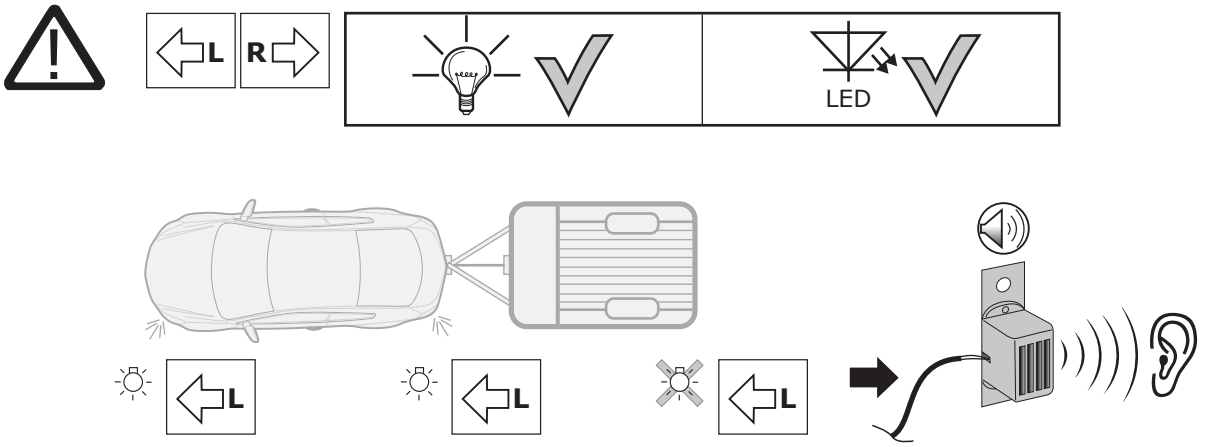

68

Right Connections UK Ltd
Unit 503 Queensway Business Park
TELFORD TF1 7UL UK

SALES: +44 (0)1952 608750 - Option 1
TECHNICAL: +44 (0)1952 608750 - Option 2

Web: www.rightconnections.co.uk
Email: Technical@rightconnect.co.uk

Revision: 1 / 23.07.2026
VW-305-13M

How to change the Duplex-mode if required:

INFO

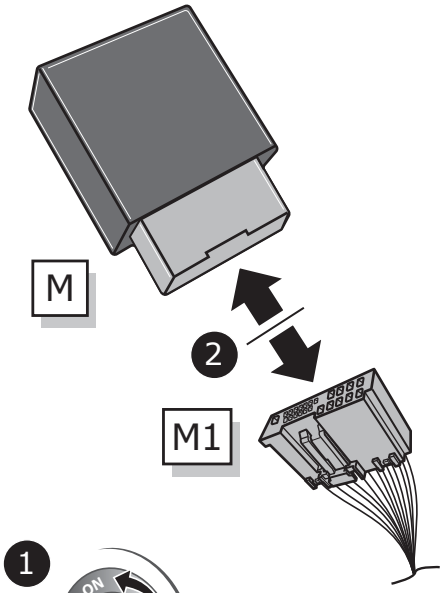

1. **Turn off ignition**
2. **Disconnect trailer module M from harness M1**
3. **Disconnect battery**
4. **Set up requested Duplex mode:**
   - **Disconnect D and attach buzzer (B) for read-only mode**
   - **Connect D and remove buzzer (B) for read/write mode**

➢ **Connect trailer module M to harness M1**
➢ **Connect battery**
➢ **Turn on the ignition and run a full test**
➢ **Coding may need removing or adding depending on Duplex mode selected**

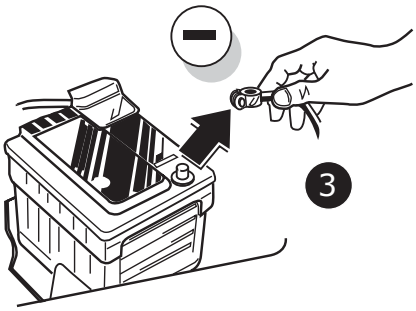

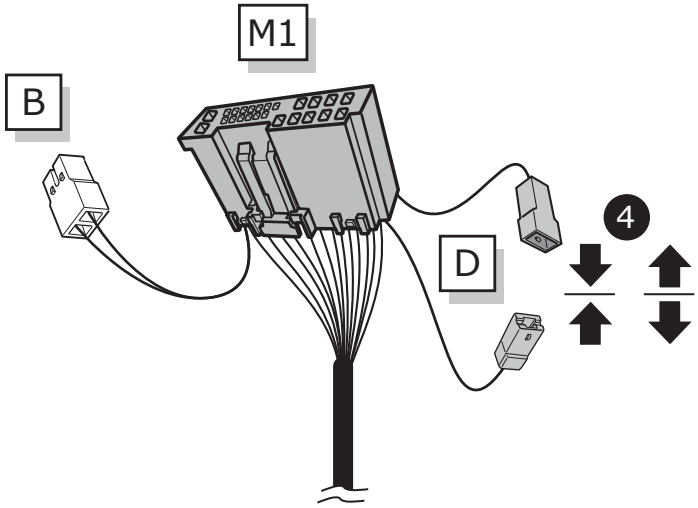

69

The following light functions for the trailer are **not supported** by all towing vehicles **with DRL circuit:**

- **Rear lights**
- **Side lights**
- **Numberplate lights**

The **taillights or dimmed headlights must be switched on** to activate this function!

70

Right Connections UK Ltd
Unit 503 Queensway Business Park
TELFORD TF1 7UL UK

SALES: +44 (0)1952 608750 - Option 1
TECHNICAL: +44 (0)1952 608750 - Option 2

Web: www.rightconnections.co.uk
Email: Technical@rightconnect.co.uk

Revision: 1 / 23.07.2026
VW-305-13M

Optional

Adapter socket

71

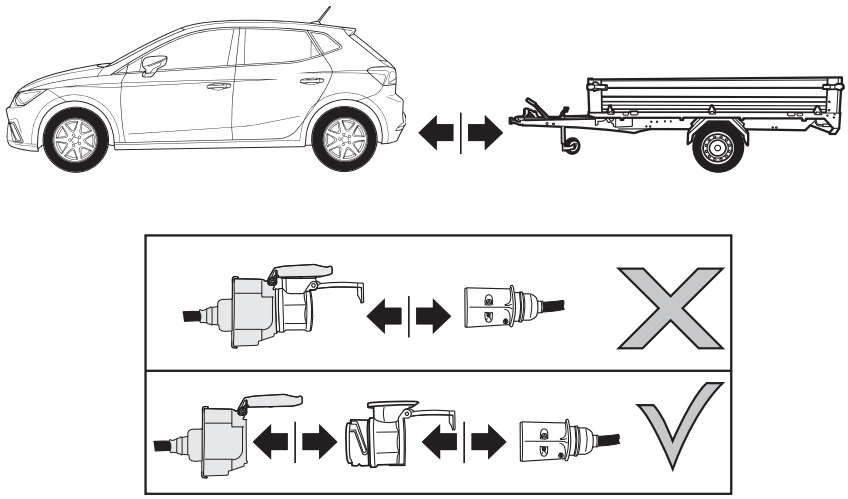

72

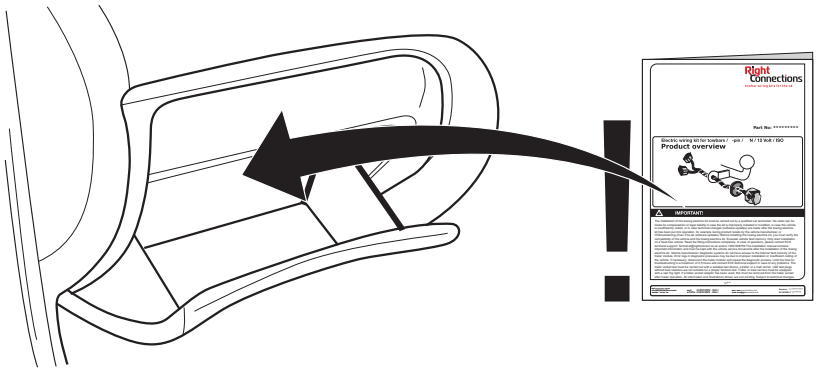

73

Right Connections UK Ltd
Unit 503 Queensway Business Park
TELFORD TF1 7UL UK

SALES: +44 (0)1952 608750 - Option 1
TECHNICAL: +44 (0)1952 608750 - Option 2

Web: www.rightconnections.co.uk
Email: Technical@rightconnect.co.uk

Revision: 1 / 23.07.2026
VW-305-13M

SOCKET CONNECTION

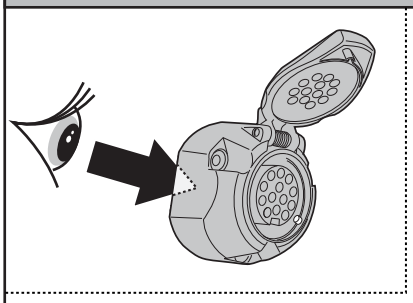

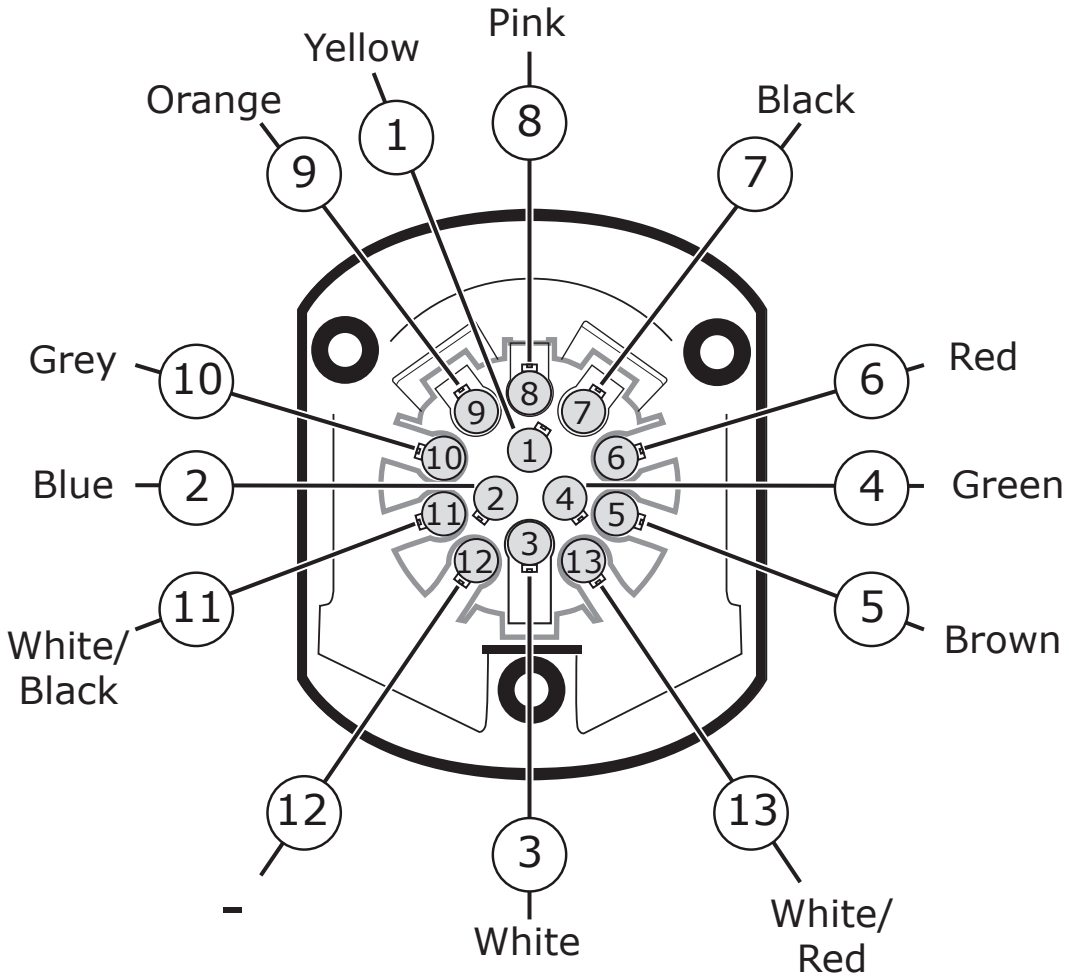

SOCKET CONNECTION

DIN/ISO 11446	L		⏚1-8	R		STOP		Reverse	30+	15+	⏚10	—	⏚ 9
	1/L	2	3/33	4/R	5/58-R	6/54	7/58-L	8	9	10	11	12	13
Pmax	21W	42W		21W	52W	3x21W	52W	42W	180W/15Amp	180W/15Amp			
Colour	Yellow	Blue	White	Green	Brown	Red	Black	Pink	Orange	Grey	White/ Black	-	White/ Red

Right Connections UK Ltd
Unit 503 Queensway Business Park
TELFORD TF1 7UL UK

SALES: +44 (0)1952 608750 - Option 1
TECHNICAL: +44 (0)1952 608750 - Option 2

Web: www.rightconnections.co.uk
Email: Technical@rightconnect.co.uk

Revision: 1 / 23.07.2026
VW-305-13M