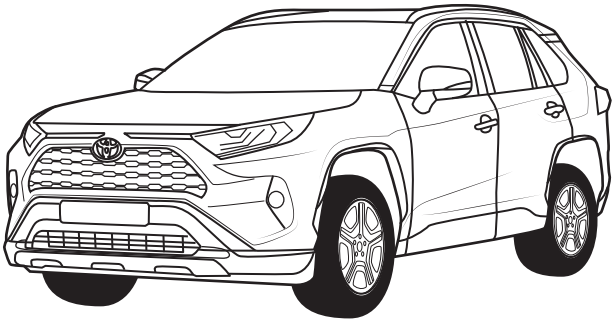

Right Connections

towbar wiring kits for the uk

TOYOTA / SUZUKI

RAV4	11/2018 >> 11/2025
RAV4 Hybrid	11/2018 >> 11/2025
ACROSS	10/2020 >>

Part No: TO-295-07

Electric wiring kit for towbars / 7-pin / 12N / 12 Volt / ISO 1724

Fitting instructions

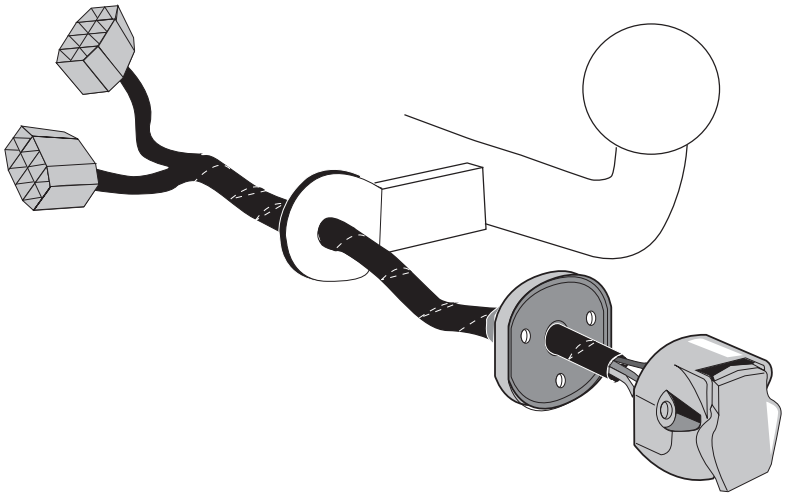

IMPORTANT!

This electric kit has to be installed by a professional workshop or a suitable qualified person.
The installation instructions must have been read and fully understood before the start of any installation. Please contact your wiring kit provider or the hotline shown in the footer should you need assistance!
Make sure the vehicle is approved/homologated by the manufacturer to tow a trailer!
Also please check that there is a definite compatibility between this vehicle and the electric kit!
Following the installation of the electric kit, the fitting instructions should be kept together with the vehicle service document and vehicle handbook. The fitting instructions contain important information relating to the use and function of the towing kit as well as for any diagnostic or activation process, that might have to be repeated in the future (e.g. after the performance of a vehicle software update).
All warranty claims will be forfeited if the electric kit or components contained therein are used incorrectly or modified. If a towing socket adaptor has been used to connect to the trailer or bike rack, this must be removed from the trailer socket once the trailer or bike rack has been disconnected.
If the trailer or bike rack is not equipped with a rear fog lamp, depending on the towing vehicle type, the correct function of the towing kit cannot be guaranteed. In such cases, a rear fog lamp should be retro fitted.
This towing electric kit will not be covered under warranty if any technical or electrical modifications or software updates have been performed by the vehicle manufacturer after the initial commissioning of the kit. That applies especially to modifications or updates which may cause malfunctions in the trailer socket or any other part of the trailer electrical equipment!
Depending on the type of trailer module used in this electric kit, diagnostic interrogation with the vehicle's electrical system may be limited or will not function. The error memory inside the trailer module may not be able to be accessed by vehicle manufacturers diagnostic system.
Error logs relating to the trailer electrical equipment, that may be generated in the vehicle manufacturers diagnostic system as a result of a test procedure, may be due to the incorrect installation of the towing electric kit or the false activation of the trailer module.
We always recommend whenever possible, the following troubleshooting process:

- **An analysis of the vehicle's error memory and possibly clearing of all faults before the start of the installation!**
- **Try disconnecting the trailer module from the towing harness and re-start the fault clearing process!**
- **If in doubt, limit the time for troubleshooting to a max of 0,5 hours and call our Technical Support Team!**

Please follow our instructions carefully and always test the towing electrics using a true lighting board or a specifically designed bulb tester. If an LED tester is used, ensure it is equipped with correct load resistors or malfunctions will occur!
This instruction is subject to changes and we reserve the right to make changes to design, colour etc.
All of the data and illustrations may not be an exact representation but the text contained in this instruction must be observed!

Right Connections UK Ltd
Unit 503 Queensway Business Park
TELFORD TF1 7UL UK

SALES: +44 (0)1952 608750 - Option 1
TECHNICAL: +44 (0)1952 608750 - Option 2

Web: www.rightconnections.co.uk
Email: Technical@rightconnect.co.uk

Revision: 5 / 30.09.2026
TO-295-07

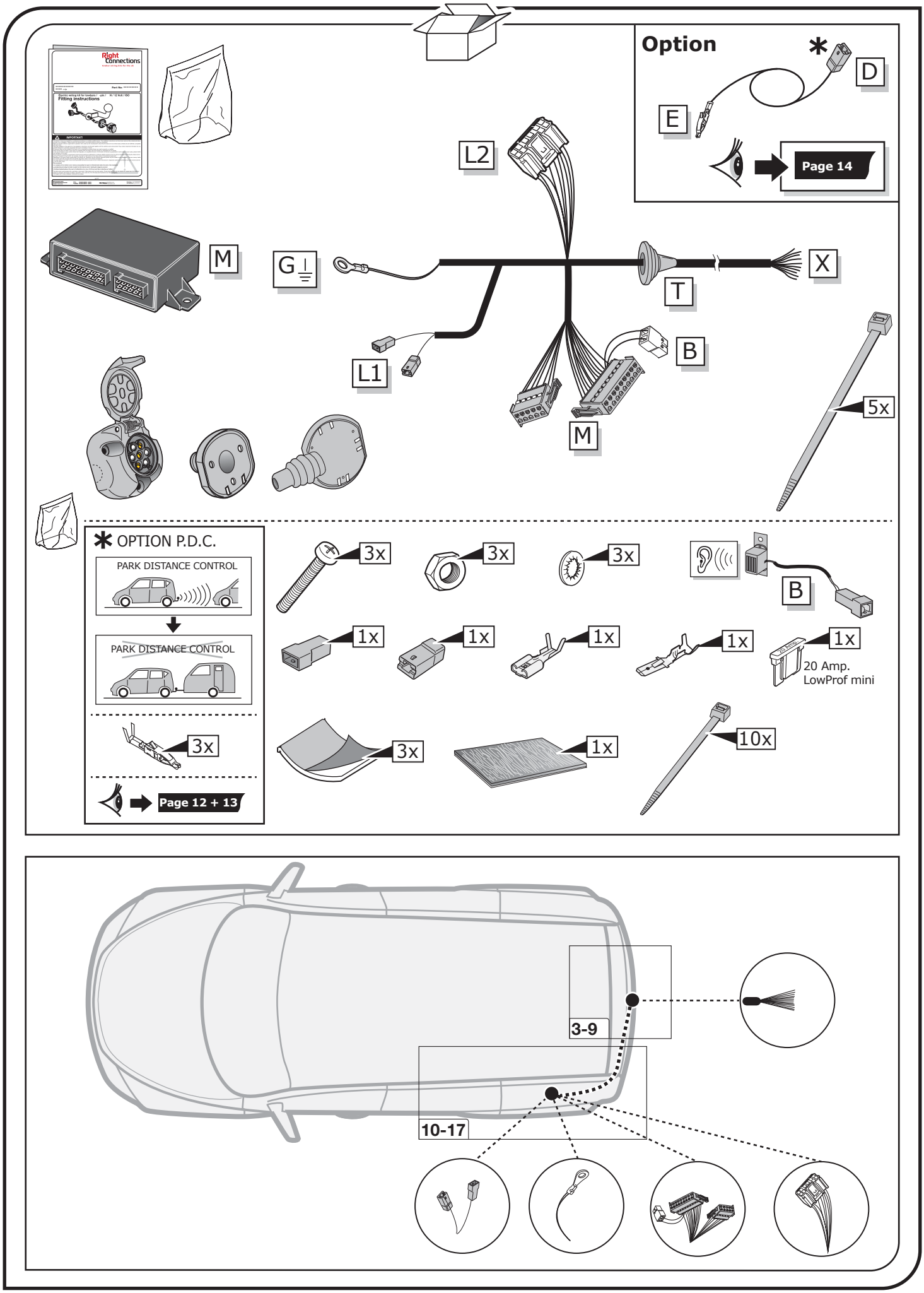

Right Connections UK Ltd
Unit 503 Queensway Business Park
TELFORD TF1 7UL UK

SALES: +44 (0)1952 608750 - Option 1
TECHNICAL: +44 (0)1952 608750 - Option 2

Web: www.rightconnections.co.uk
Email: Technical@rightconnect.co.uk

Revision: 5 / 30.09.2026
TO-295-07

SYMBOL EXPLANATION

	Left (58-L) respectively Right (58-R) tail light
54 STOP	Stop light (54) / high mounted, third stop light (54)
L	Turn signal indicator left
R	Turn signal indicator right
	Rear fog light(s)
Reverse	Reversing light(s)
30+	Permanent power supply / 13pin socket, chamber 9
15+	Charging wire for trailer battery / 13pin socket, chamber 10
	Trailer / trailer recognition
B+/30	Permanent current power supply
	Ground or Earth (31)
	Ground connection battery terminal lug
	Positive connection battery terminal lug

12V	Cigarette lighter / accessory socket
	Loudspeaker / buzzer
	Park Distance Control
	Switch / source of function
	Connect together
	Disconnect
	Look at / See further information
	Look carefully at selected area
	Present / Occupied / OK
	Not present / Not occupied / Not OK
	Acoustic indication
	Attention / important advice
20 Amp.	Fuse / fuse capacity 20 Ampère

TOOLS

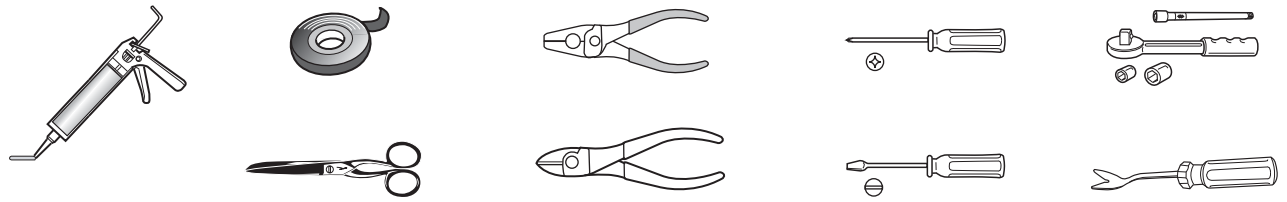

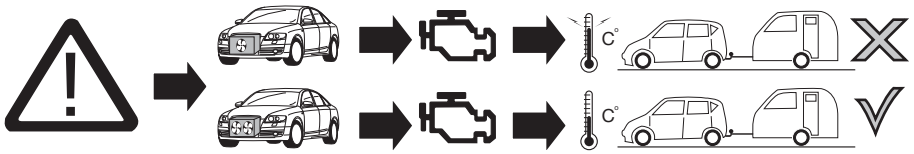

ATTENTION! The vehicle's cooling capacity may have to be increased when retrofitting a trailer coupling!
You must observe the manufacturer's instructions!!

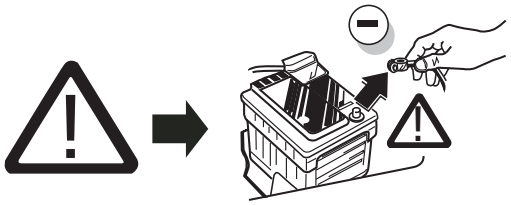

Note: It may be necessary to check if this vehicle has a stored radio code before disconnecting the battery!

ATTENTION! In order to avoid mal-functions and damage to the vehicle's electrical system the earth terminal **must be disconnected** from the vehicle's battery **before starting work!**

Both the trailer module and the vehicle's control unit for the electrical system can be damaged during work on the data bus connections if the battery is not disconnected!

Please pay attention to the manufacturer's instructions when disconnecting and reconnecting the vehicle's battery!

1

Right Connections UK Ltd
Unit 503 Queensway Business Park
TELFORD TF1 7UL UK

SALES: +44 (0)1952 608750 - Option 1
TECHNICAL: +44 (0)1952 608750 - Option 2

Web: www.rightconnections.co.uk
Email: Technical@rightconnect.co.uk

Revision: 5 / 30.09.2026
TO-295-07

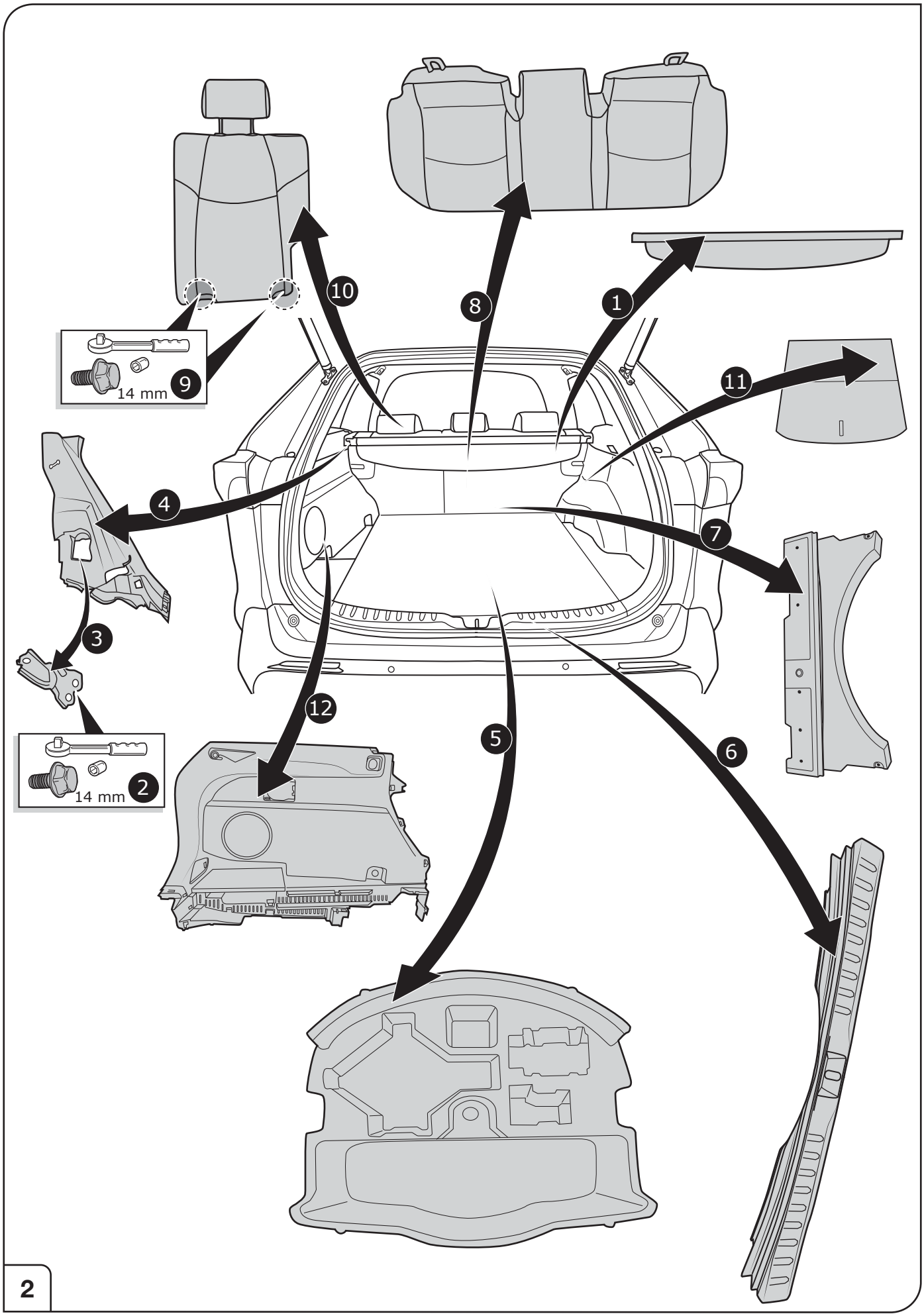

Right Connections UK Ltd
Unit 503 Queensway Business Park
TELFORD TF1 7UL UK

SALES: +44 (0)1952 608750 - Option 1
TECHNICAL: +44 (0)1952 608750 - Option 2

Web: www.rightconnections.co.uk
Email: Technical@rightconnect.co.uk

Revision: 5 / 30.09.2026
TO-295-07

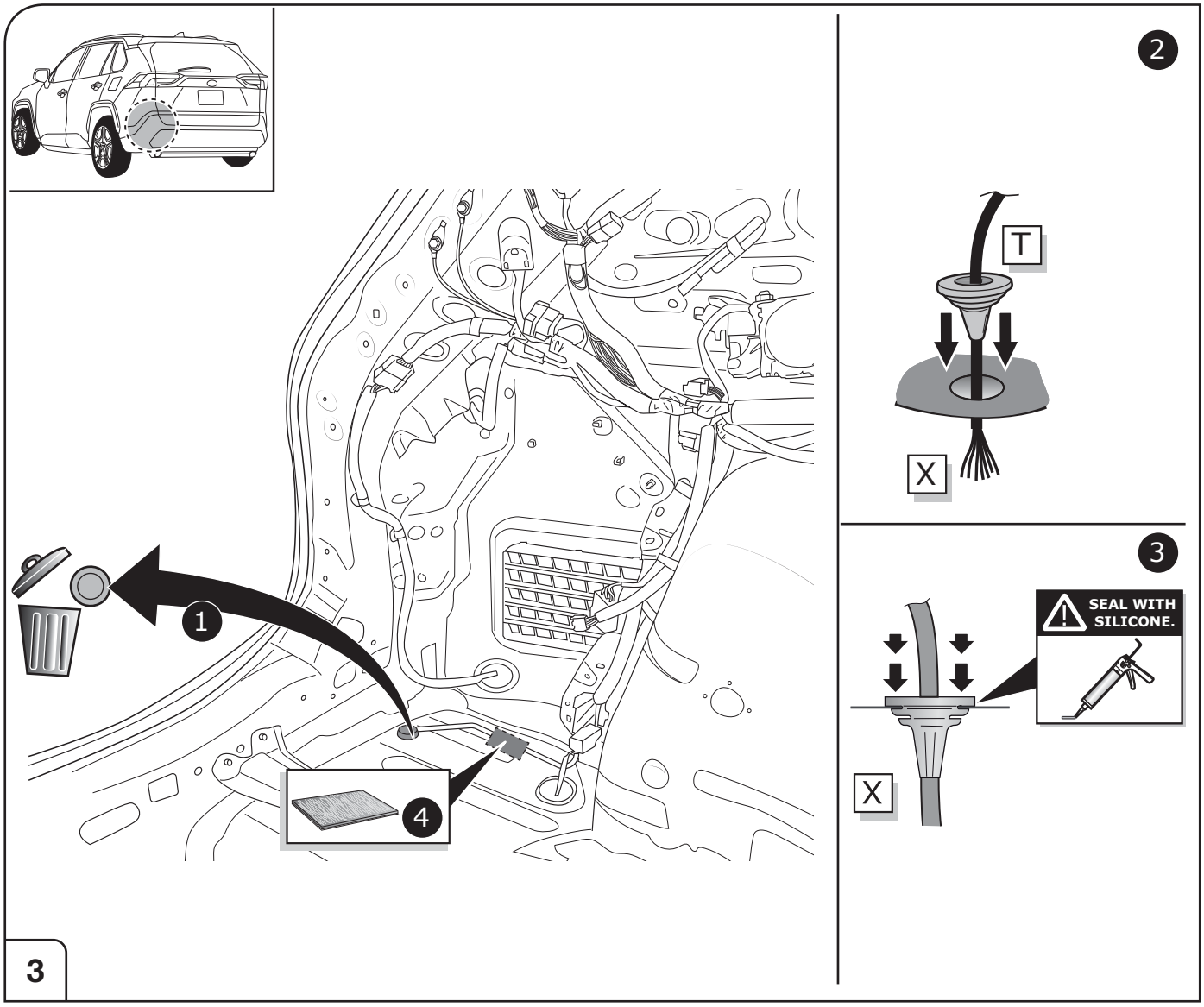

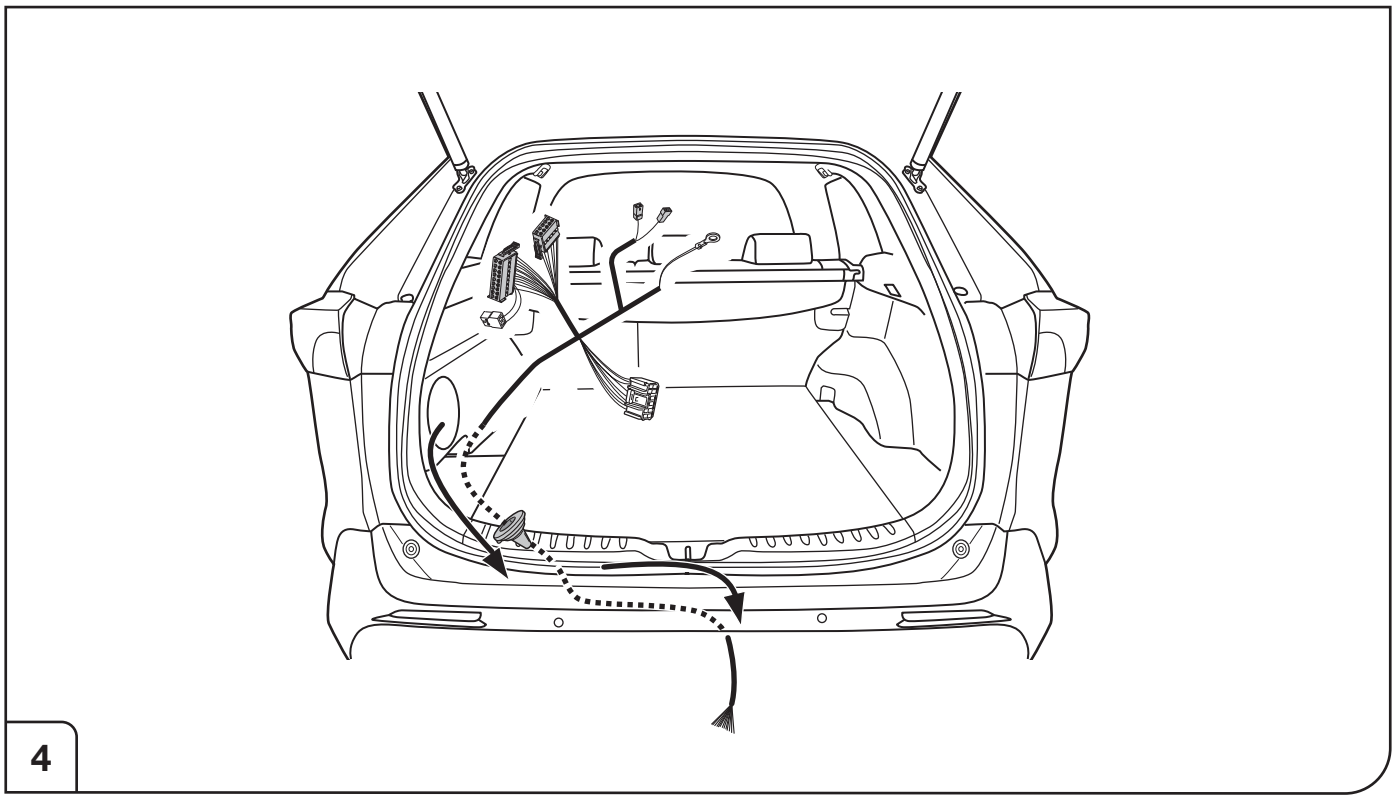

Right Connections UK Ltd
Unit 503 Queensway Business Park
TELFORD TF1 7UL UK

SALES: +44 (0)1952 608750 - Option 1
TECHNICAL: +44 (0)1952 608750 - Option 2

Web: www.rightconnections.co.uk
Email: Technical@rightconnect.co.uk

Revision: 5 / 30.09.2026
TO-295-07

Option 1

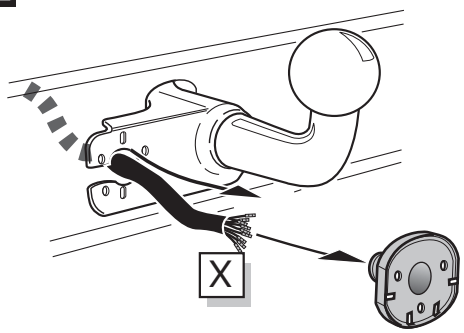

Option 2

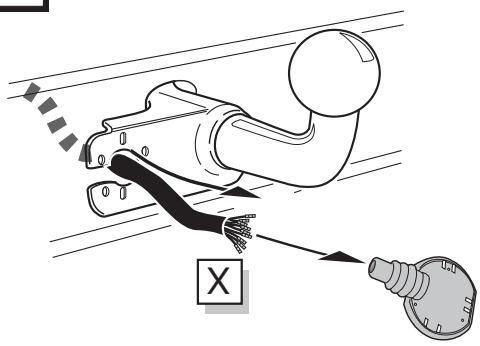

5

SOCKET CONNECTION

DIN/ISO 1724	L		1-7	R		STOP	
	1/L	2	3/31	4/R	5/58-R	6/54	7/58-L
Pmax	21W	2x21W		21W	52W	3x21W	52W
Colour	Yellow	Blue	White	Green	Brown	Red	Black

6

Option 1

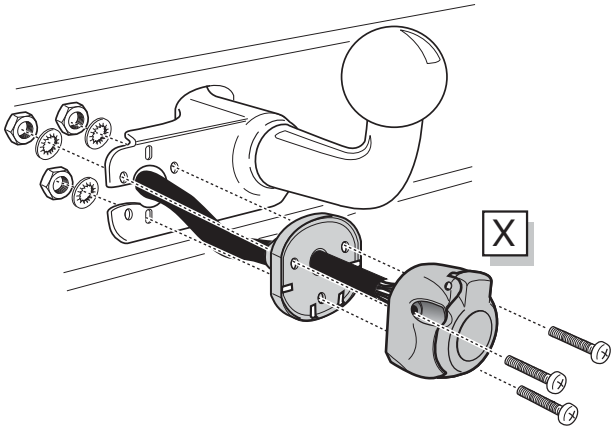

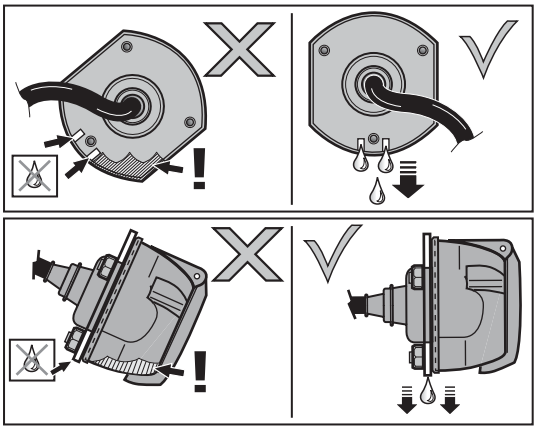

7

Option 2

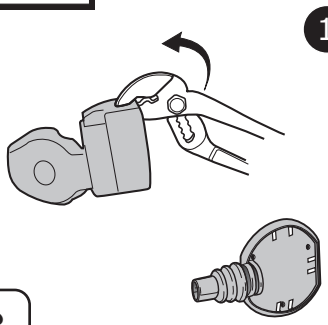

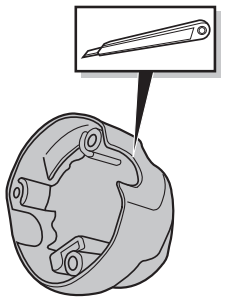

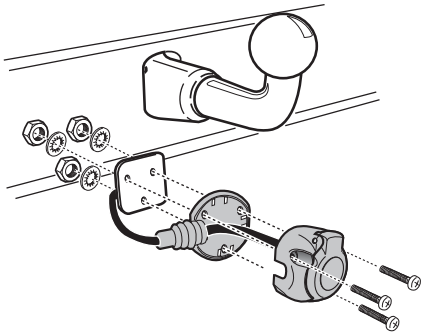

8

Right Connections UK Ltd
Unit 503 Queensway Business Park
TELFORD TF1 7UL UK

SALES: +44 (0)1952 608750 - Option 1
TECHNICAL: +44 (0)1952 608750 - Option 2

Web: www.rightconnections.co.uk
Email: Technical@rightconnect.co.uk

Revision: 5 / 30.09.2026
TO-295-07

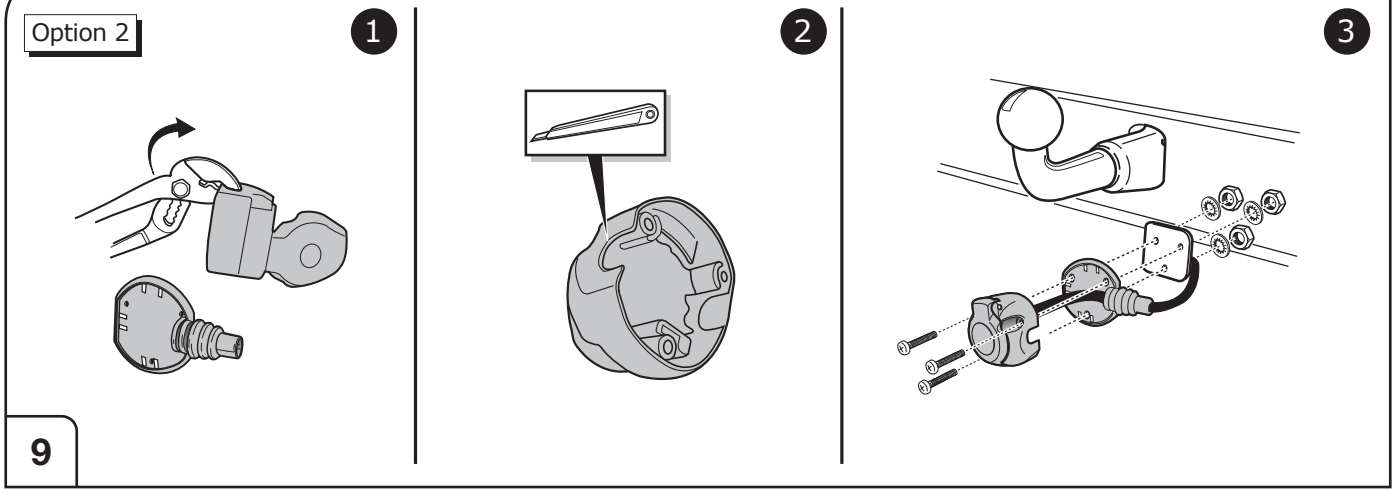

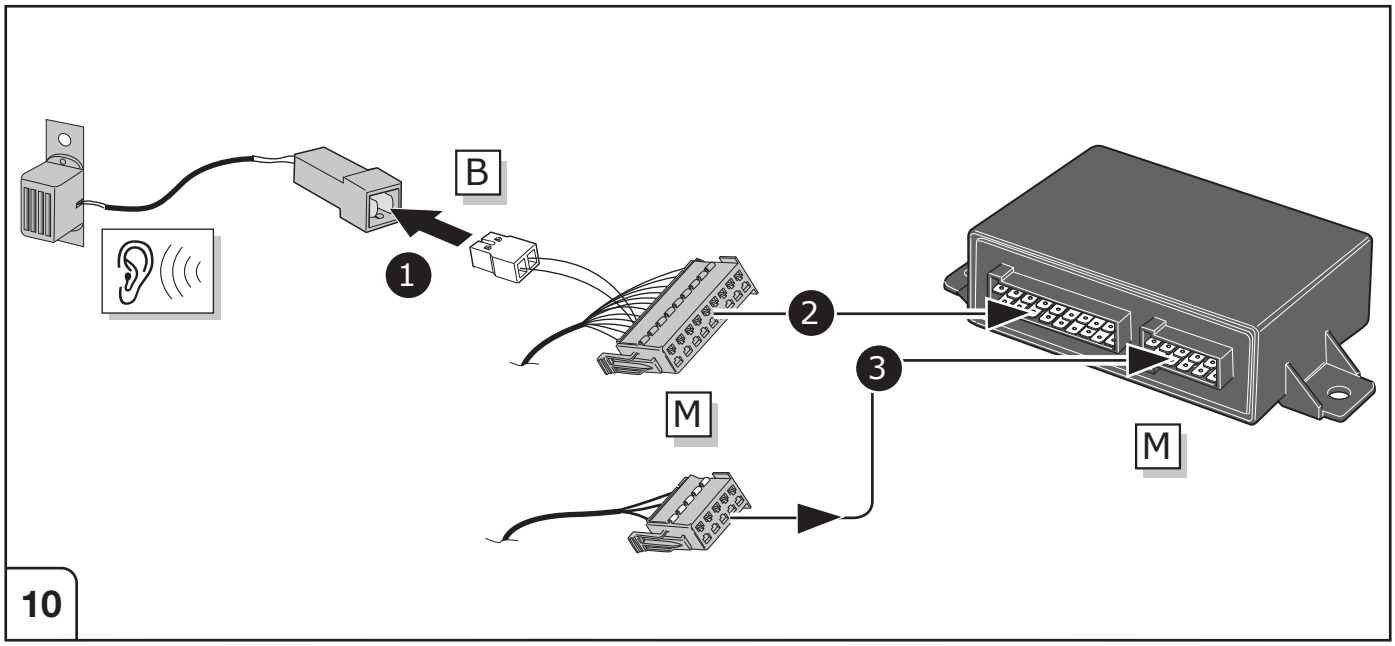

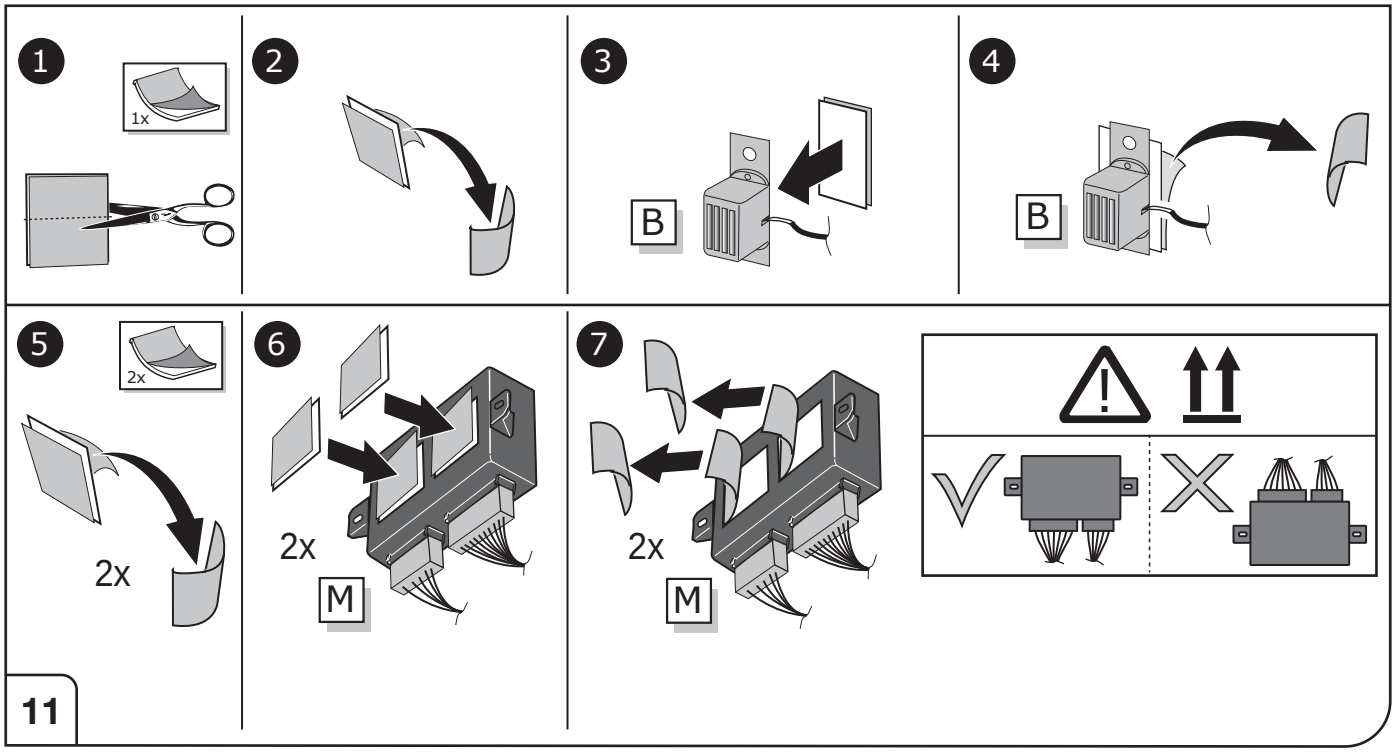

Right Connections UK Ltd
Unit 503 Queensway Business Park
TELFORD TF1 7UL UK

SALES: +44 (0)1952 608750 - Option 1
TECHNICAL: +44 (0)1952 608750 - Option 2

Web: www.rightconnections.co.uk
Email: Technical@rightconnect.co.uk

Revision: 5 / 30.09.2026
TO-295-07

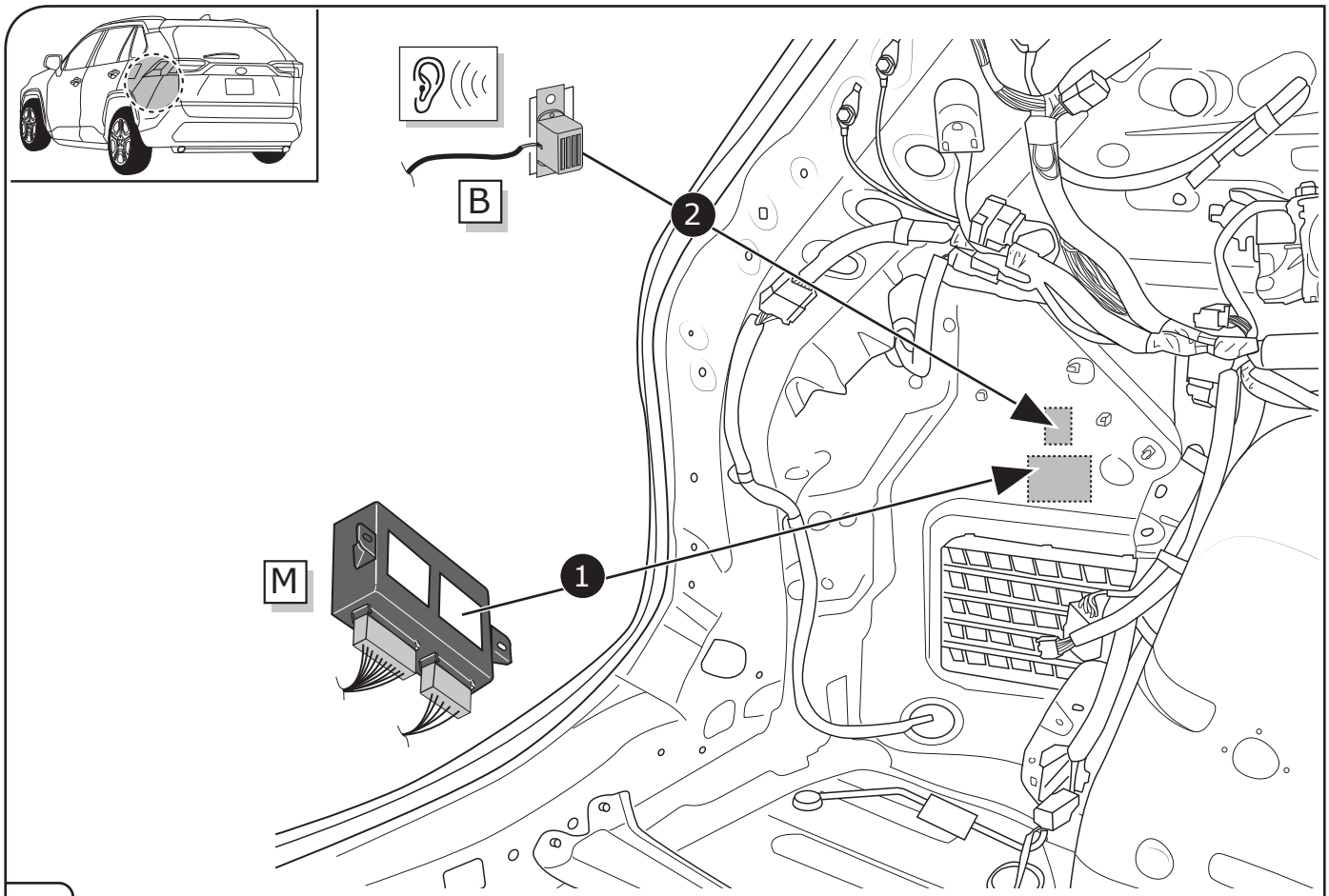

12

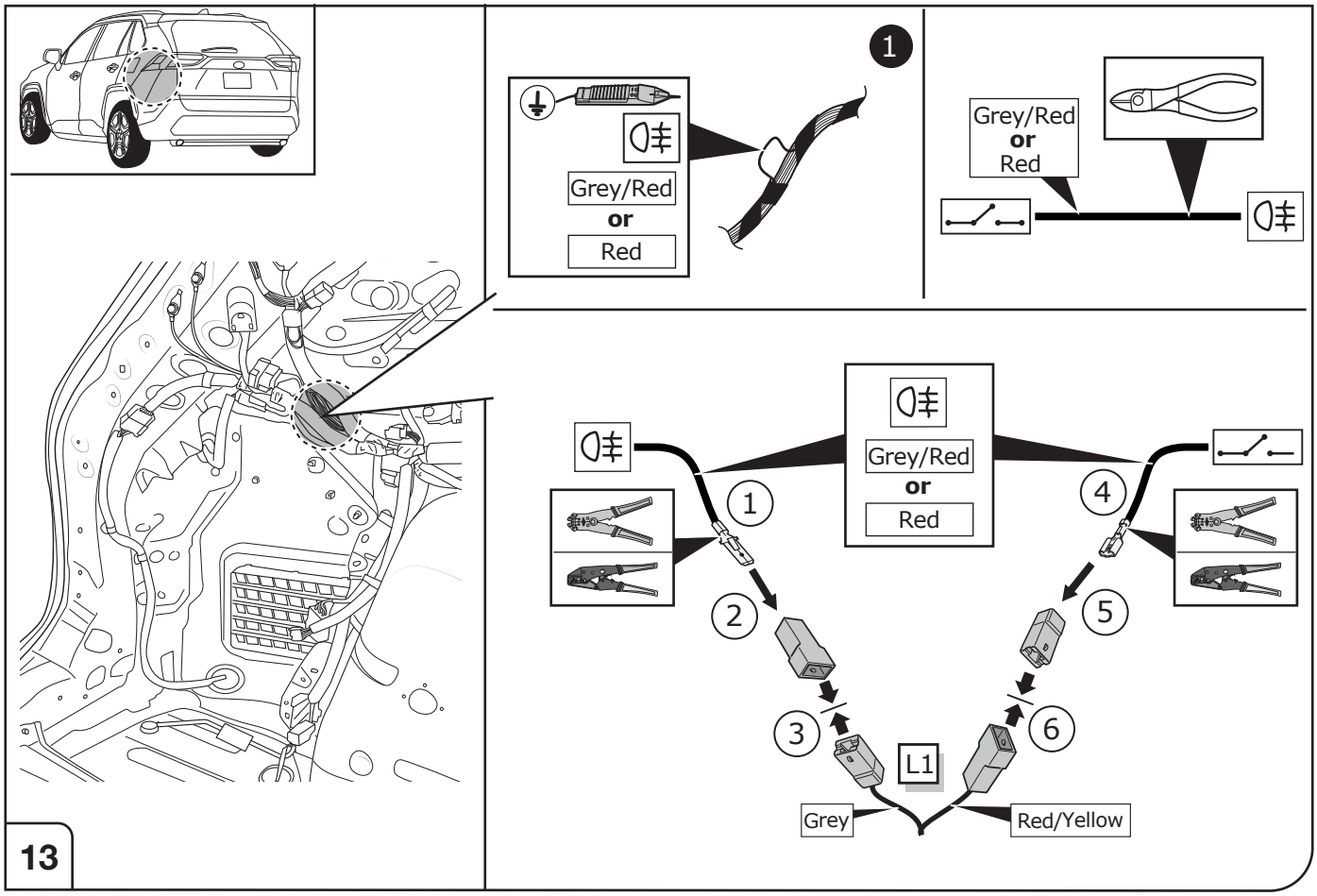

13

Right Connections UK Ltd
Unit 503 Queensway Business Park
TELFORD TF1 7UL UK

SALES: +44 (0)1952 608750 - Option 1
TECHNICAL: +44 (0)1952 608750 - Option 2

Web: www.rightconnections.co.uk
Email: Technical@rightconnect.co.uk

Revision: 5 / 30.09.2026
TO-295-07

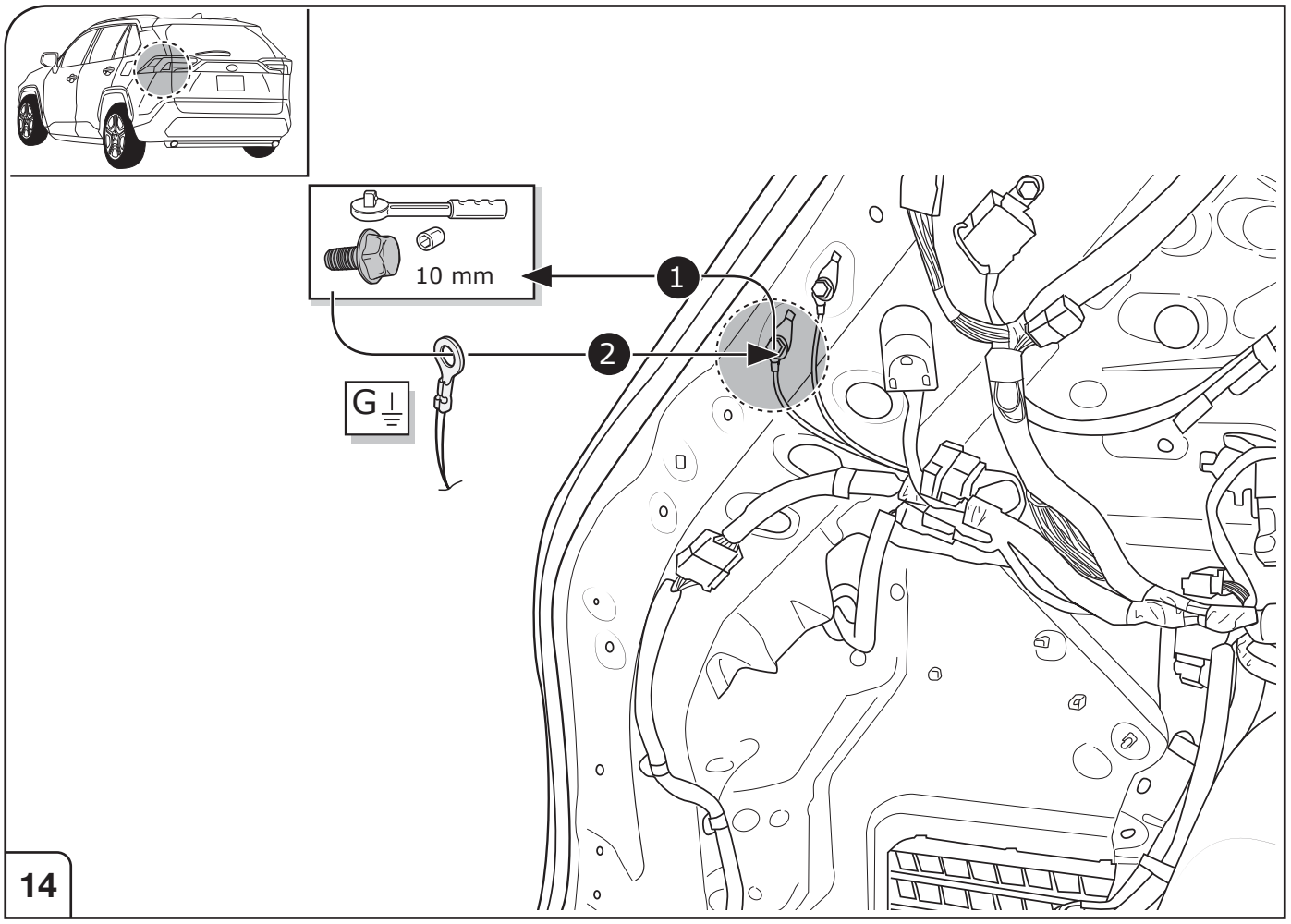

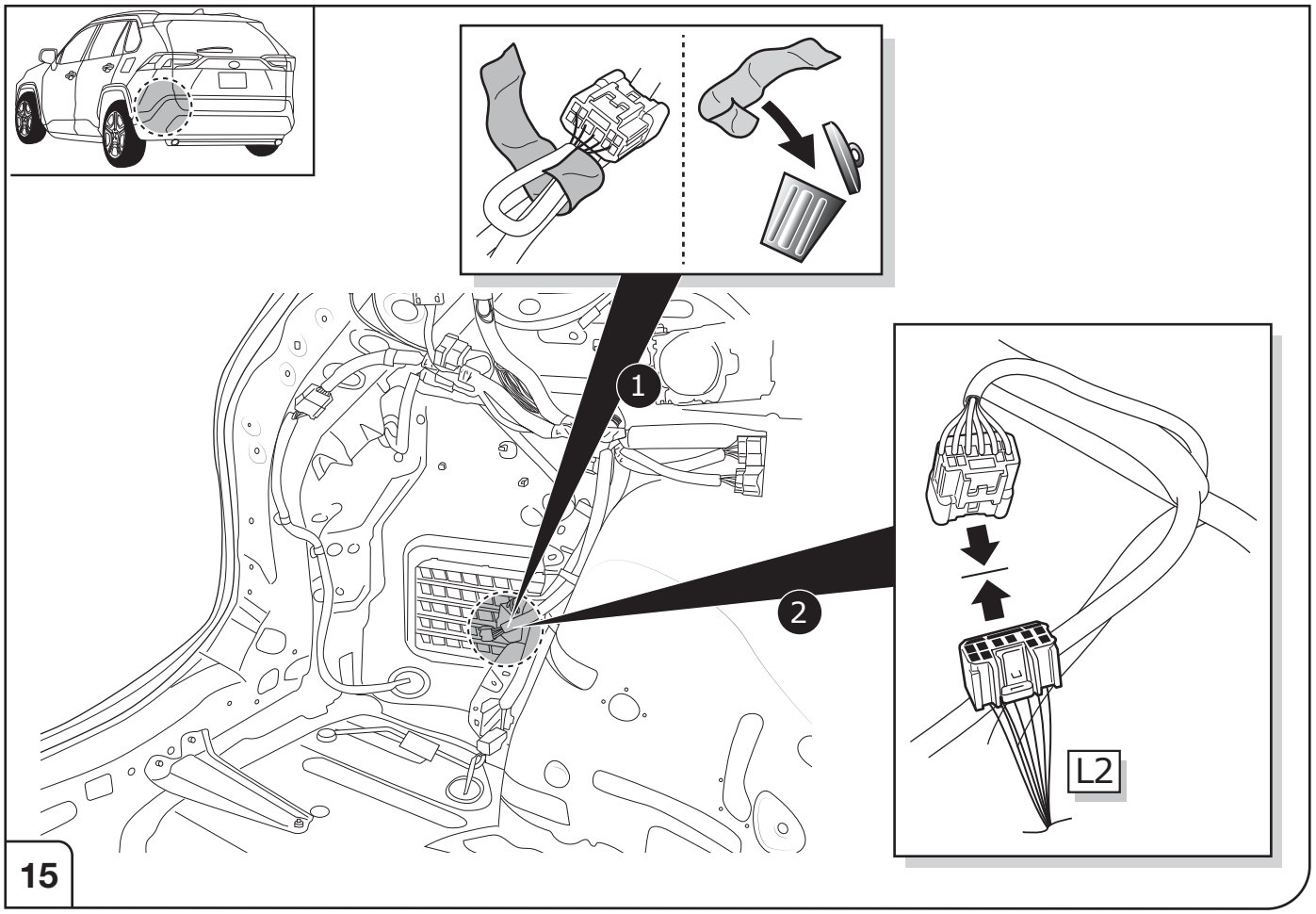

Right Connections UK Ltd
Unit 503 Queensway Business Park
TELFORD TF1 7UL UK

SALES: +44 (0)1952 608750 - Option 1
TECHNICAL: +44 (0)1952 608750 - Option 2

Web: www.rightconnections.co.uk
Email: Technical@rightconnect.co.uk

Revision: 5 / 30.09.2026
TO-295-07

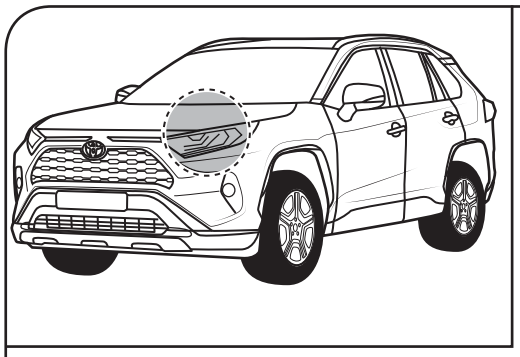

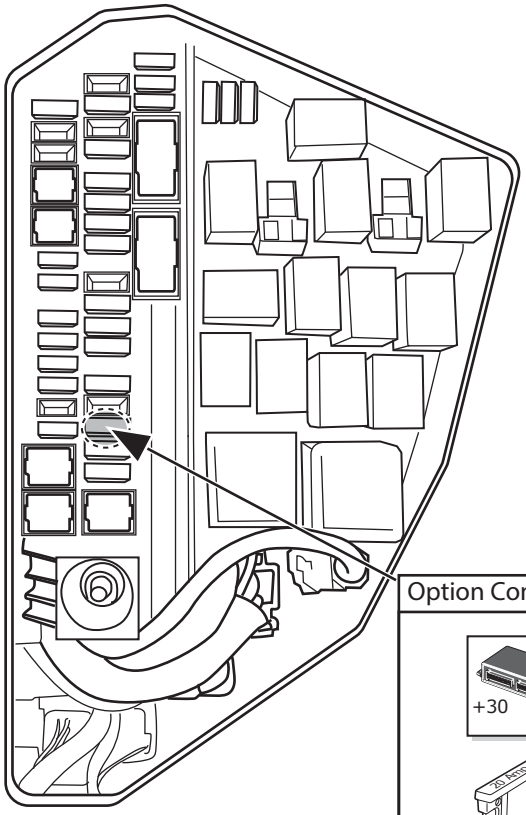

Option Convential: Towing-B

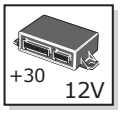

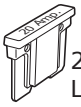

20 Amp.
LowProf mini

16

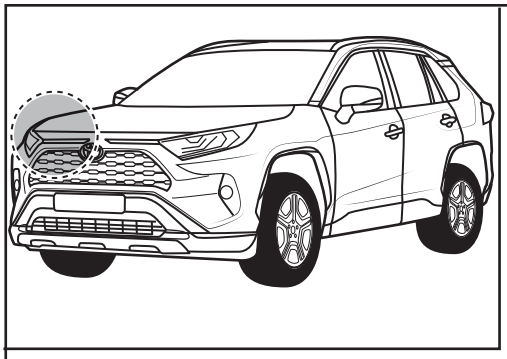

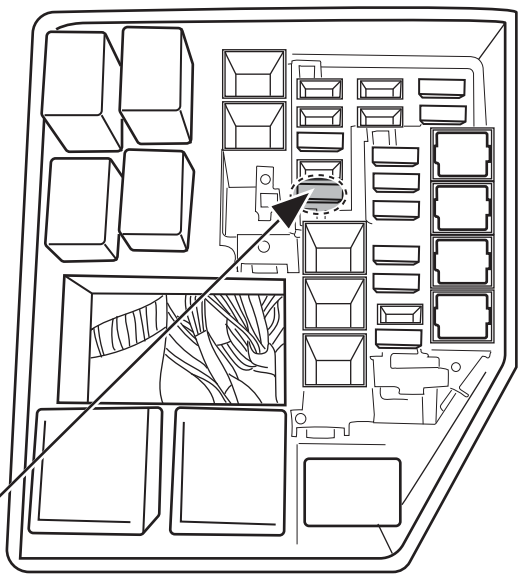

Option Hybrid: Towing-B

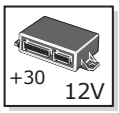

20 Amp.
LowProf mini

17

Right Connections UK Ltd
Unit 503 Queensway Business Park
TELFORD TF1 7UL UK

SALES: +44 (0)1952 608750 - Option 1
TECHNICAL: +44 (0)1952 608750 - Option 2

Web: www.rightconnections.co.uk
Email: Technical@rightconnect.co.uk

Revision: 5 / 30.09.2026
TO-295-07

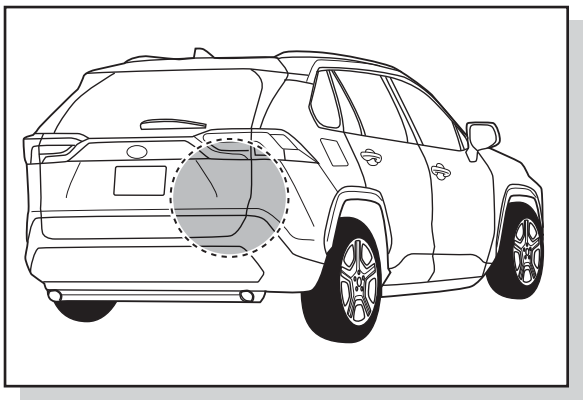

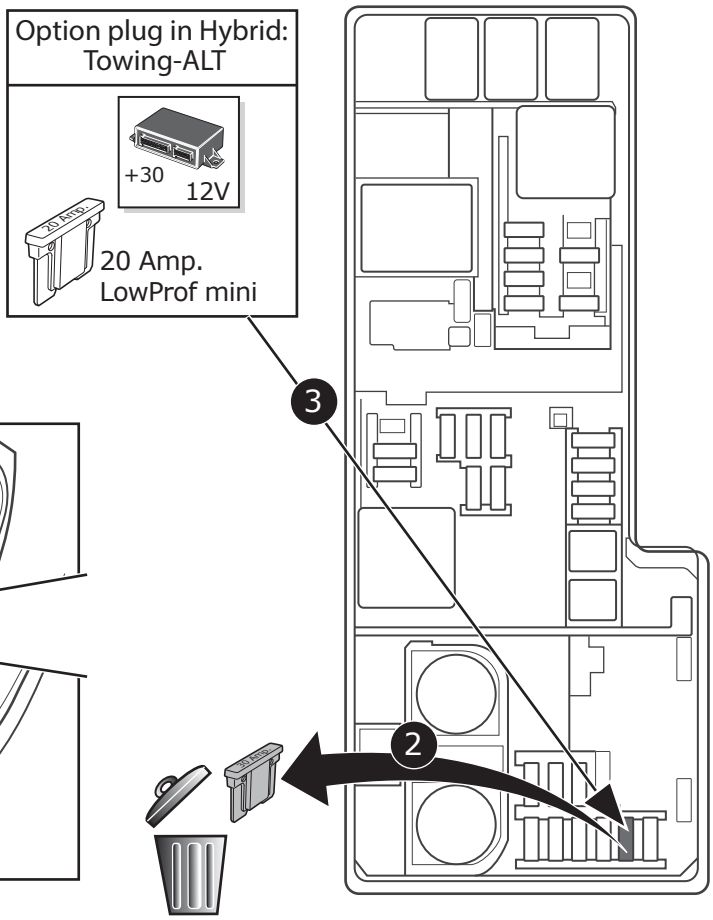

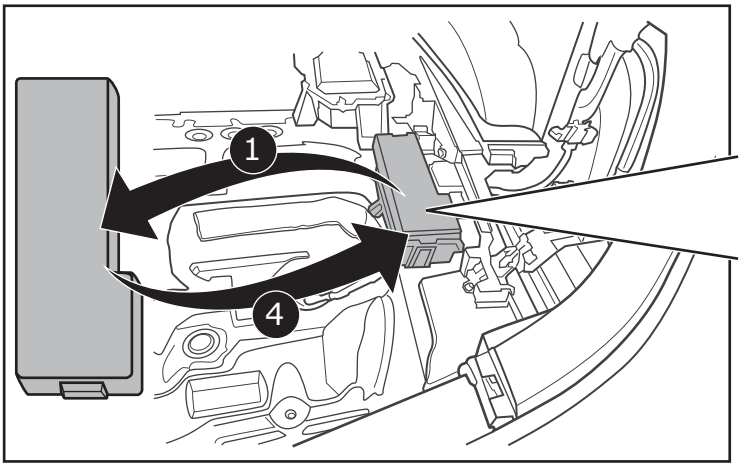

18

OPTION 1

FOR OE PDC

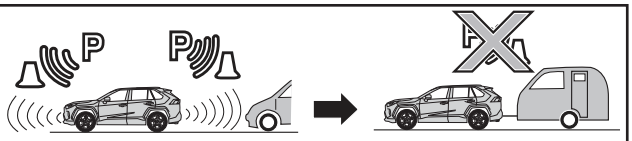

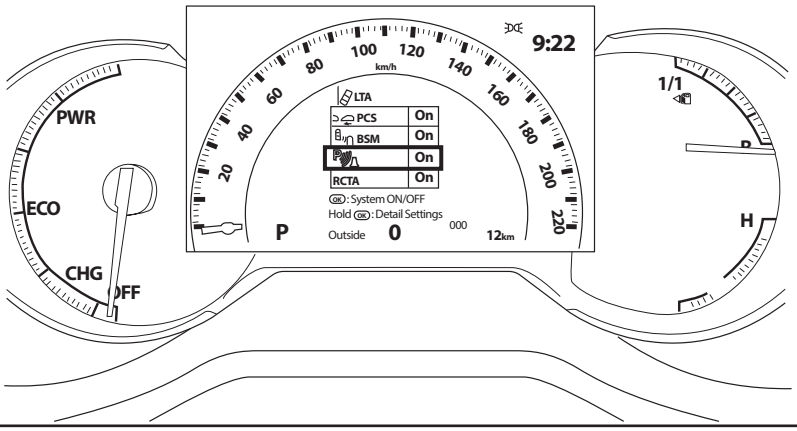

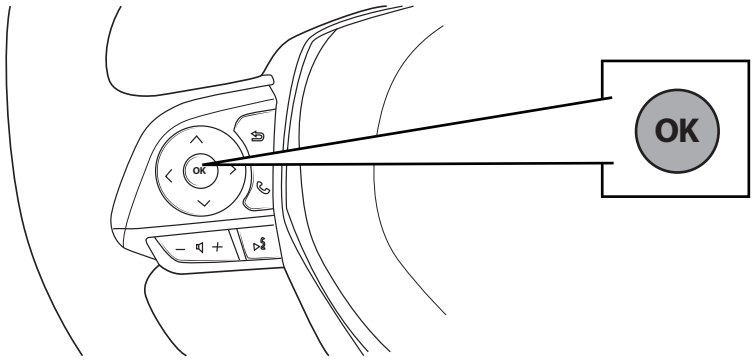

19

Right Connections UK Ltd
Unit 503 Queensway Business Park
TELFORD TF1 7UL UK

SALES: +44 (0)1952 608750 - Option 1
TECHNICAL: +44 (0)1952 608750 - Option 2

Web: www.rightconnections.co.uk
Email: Technical@rightconnect.co.uk

Revision: 5 / 30.09.2026
TO-295-07

OPTION 2

AUTO PARK-SENSOR SWITCH-OFF FUNCTION WITH THE 5D033 ECU

FUNCTION

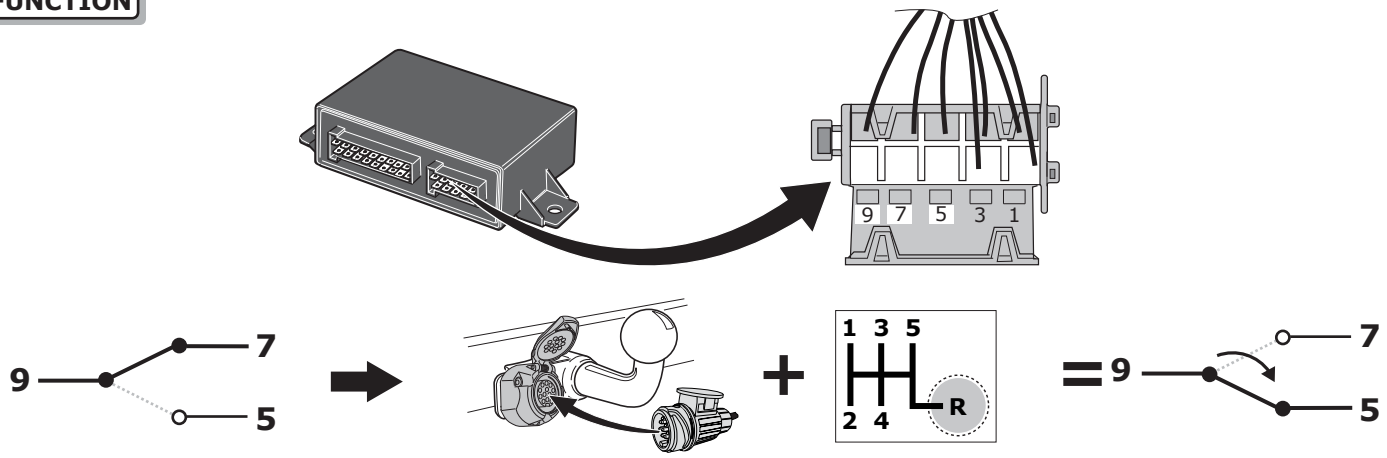

INFO

Locate the **PDC** (Parking Sensor) Module in the Vehicle.

OPTION 1 When the PDC-system has no specific **MUTE** wire: Locate and cut the wire at **ONE** of the locations A-G and connect to the **ECS Towbar Wiring Kit** as shown in Option 1. Always check if cutting the wire at the selected location does not create any errors in the PDC-system or the vehicle, if so, then select another location. In this case the cut wire is connected and the system operates normally. When the trailer is connected. This wire becomes disconnected by the Trailer Module. If the same module also controls the Front Sensors then use only locations F or G to prevent the front sensors switching off.

OPTION 2 When the PDC-system has a specific **MUTE** wire: Check in the manual of the PDC-sysctem which input the PDC module requires to switch off the system (+12v **or** Earth trigger). Then connect the Trigger wire of the PDC system to pin 9 of the ECS connector, and connect the required feed (+12v **or** Earth) to pin 7 and 5.
Be careful as connecting the wrong feed can cause damage to the PDC-system.

Always check Before and After installation the PDC System is working correctly, and where possible any error codes

Right Connections UK Ltd
Unit 503 Queensway Business Park
TELFORD TF1 7UL UK

SALES: +44 (0)1952 608750 - Option 1
TECHNICAL: +44 (0)1952 608750 - Option 2

Web: www.rightconnections.co.uk
Email: Technical@rightconnect.co.uk

Revision: 5 / 30.09.2026
TO-295-07

OPTION 2

AUTO PARK-SENSOR SWITCH-OFF FUNCTION WITH THE 5D033 ECU

AFTER MARKET / NON-OE PARKSENSOR-SYSTEM

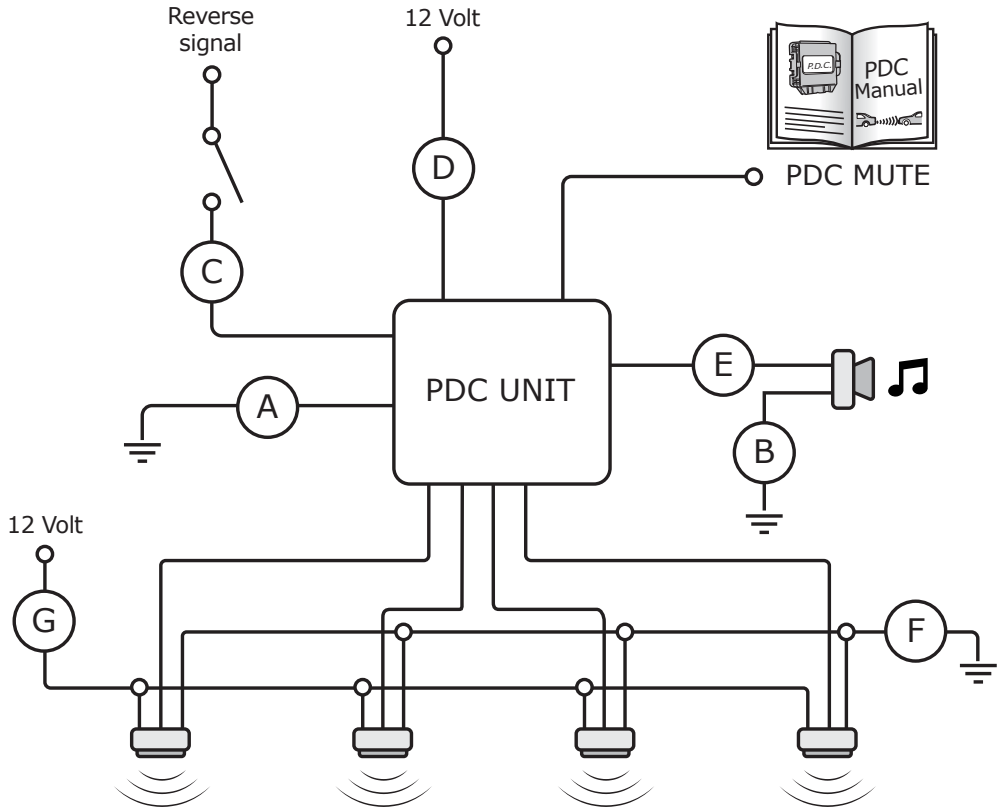

OPTION 1, NO PDC MUTE

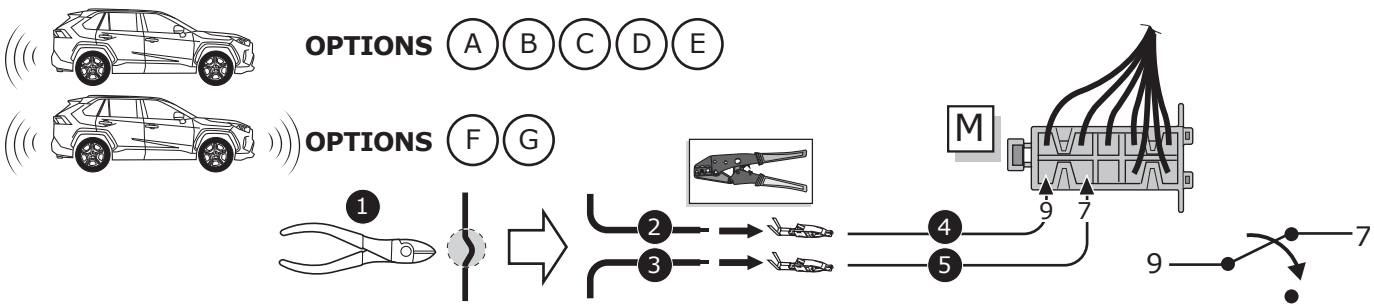

OPTION 2, PDC MUTE

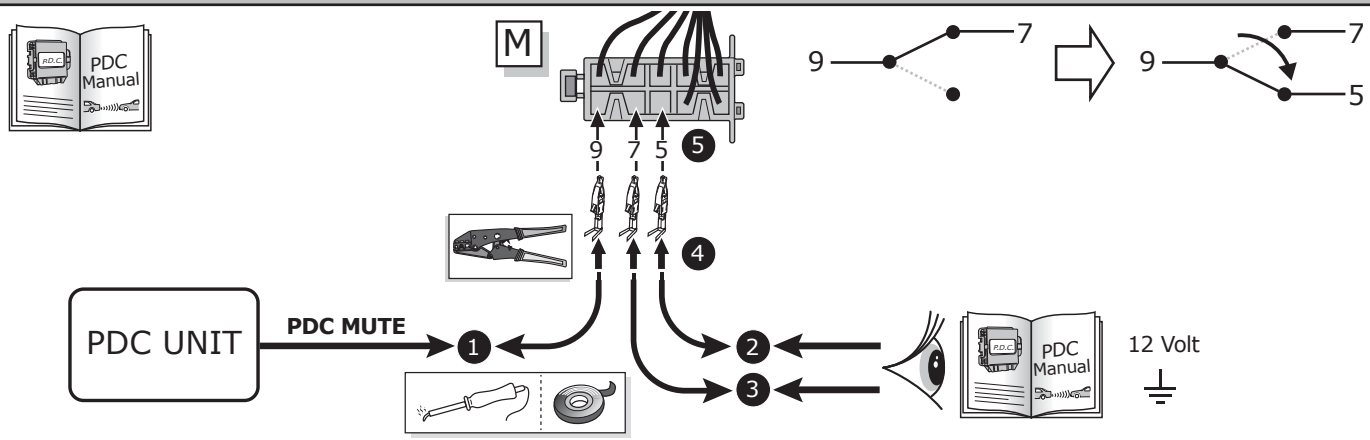

Right Connections UK Ltd
Unit 503 Queensway Business Park
TELFORD TF1 7UL UK

SALES: +44 (0)1952 608750 - Option 1
TECHNICAL: +44 (0)1952 608750 - Option 2

Web: www.rightconnections.co.uk
Email: Technical@rightconnect.co.uk

Revision: 5 / 30.09.2026
TO-295-07

Reverse signal preparation

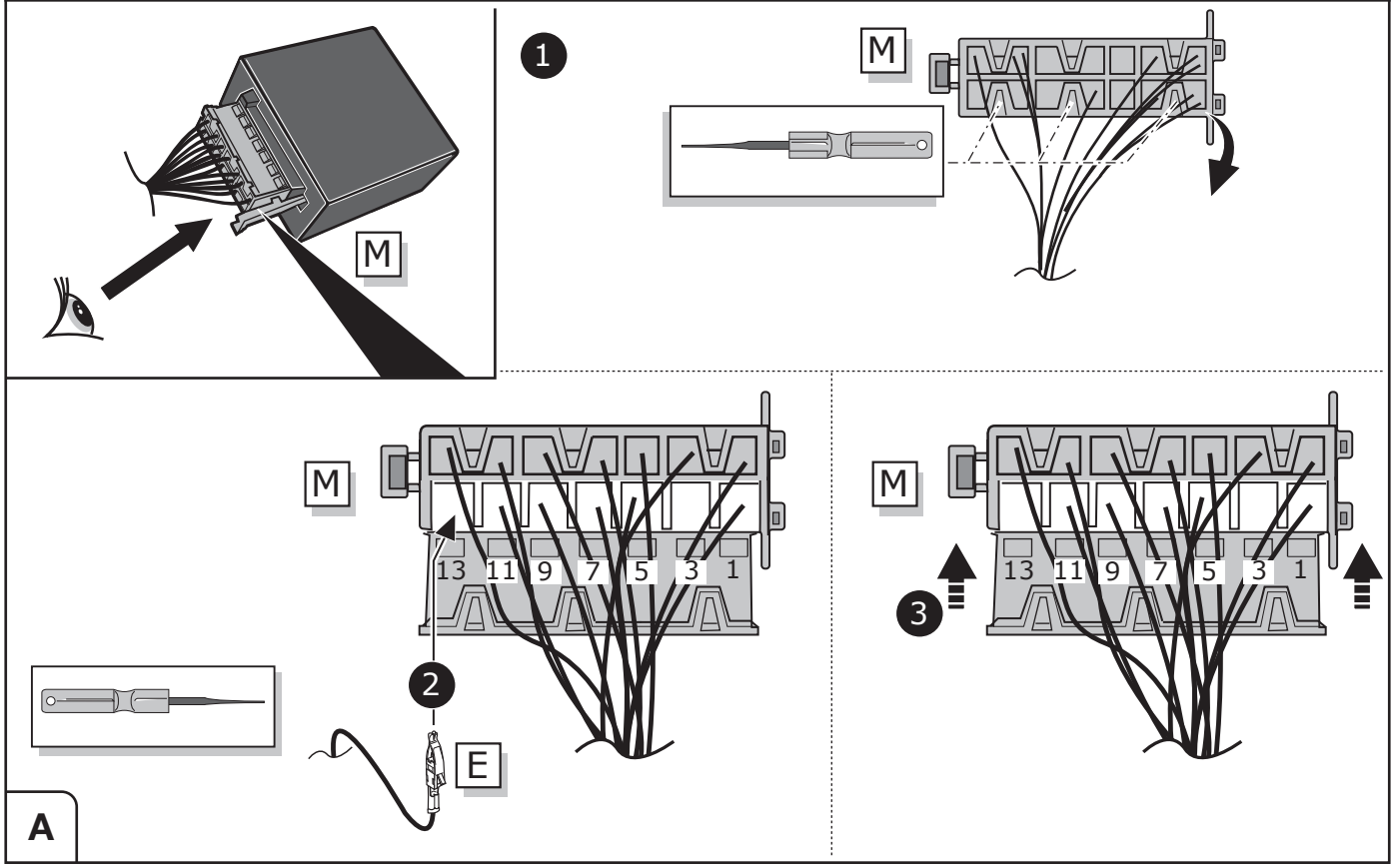

Reverse signal preparation

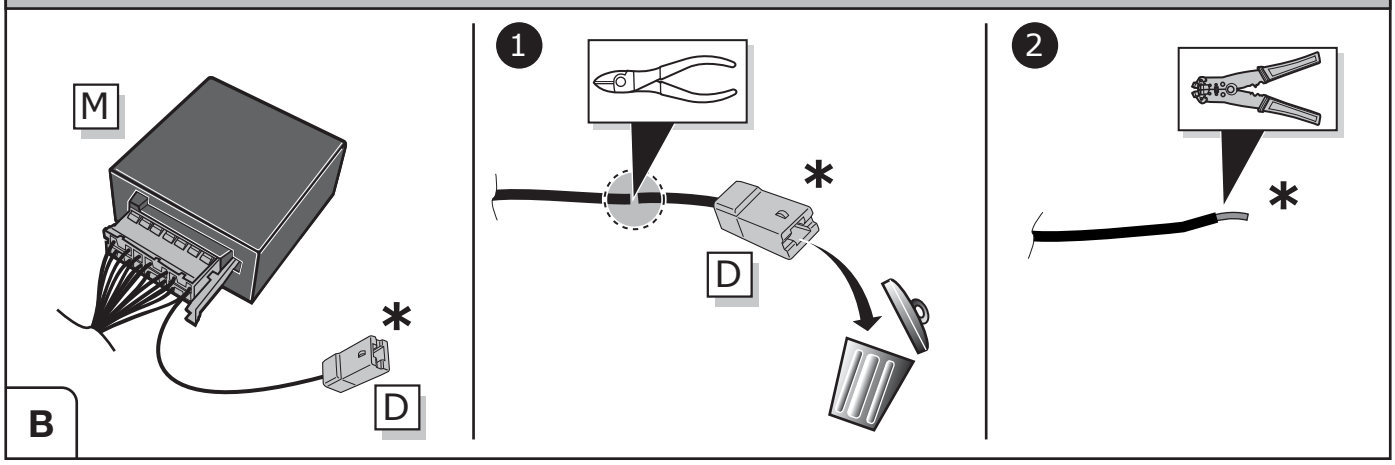

Reverse signal preparation

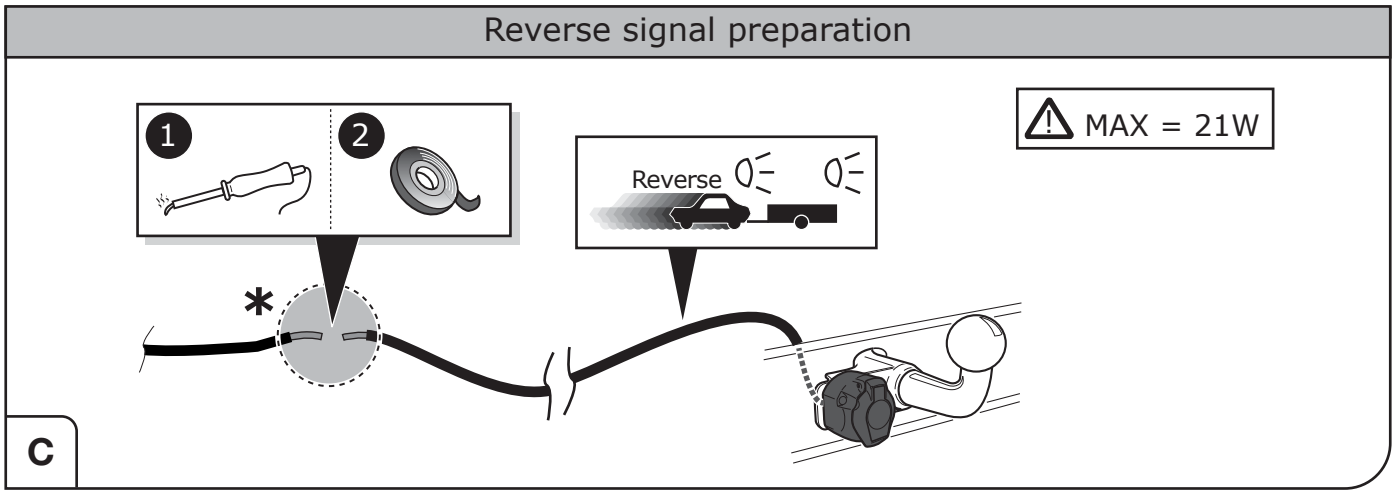

Right Connections UK Ltd
Unit 503 Queensway Business Park
TELFORD TF1 7UL UK

SALES: +44 (0)1952 608750 - Option 1
TECHNICAL: +44 (0)1952 608750 - Option 2

Web: www.rightconnections.co.uk
Email: Technical@rightconnect.co.uk

Revision: 5 / 30.09.2026
TO-295-07

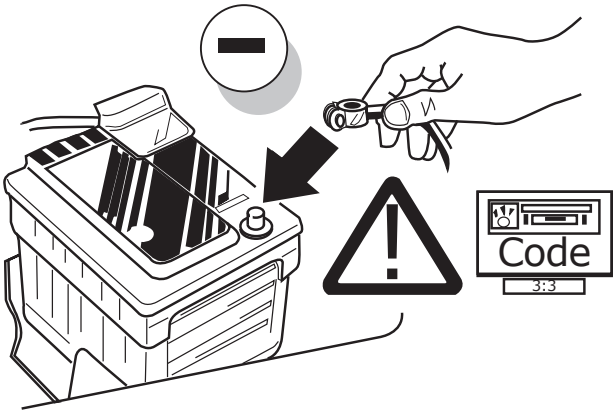

20

Please note:
Due to the technical system of the vehicle, some assistance systems are not or only partially available whilst a trailer is attached.
Assistance systems with emergency brake function (AEB) may need to be deactivated whilst a trailer is attached.

Automatic or remote-controlled parking assistance systems must not be used whilst a trailer is attached!
For more information please refer to the vehicles owner's manual.

INFO

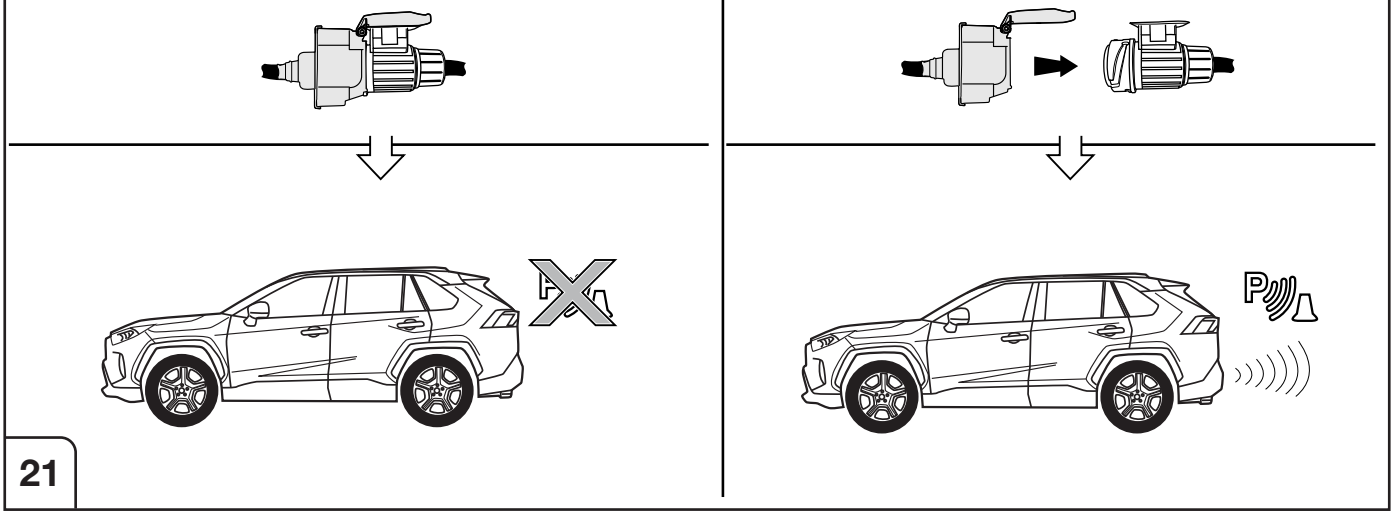

21

Optional

Right Connections
towbar wiring kits for the uk

Trailer Simulator for 7- and 13-pin Sockets

22

Right Connections UK Ltd
Unit 503 Queensway Business Park
TELFORD TF1 7UL UK

SALES: +44 (0)1952 608750 - Option 1
TECHNICAL: +44 (0)1952 608750 - Option 2

Web: www.rightconnections.co.uk
Email: Technical@rightconnect.co.uk

Revision: 5 / 30.09.2026
TO-295-07

Functional test

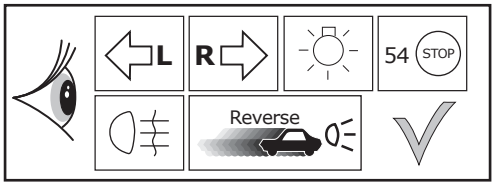

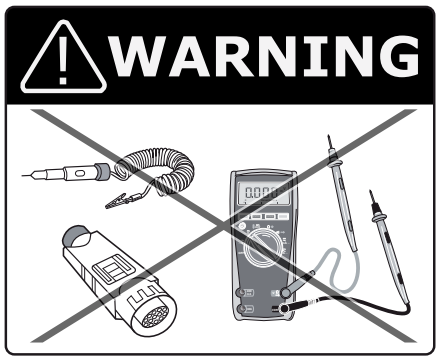

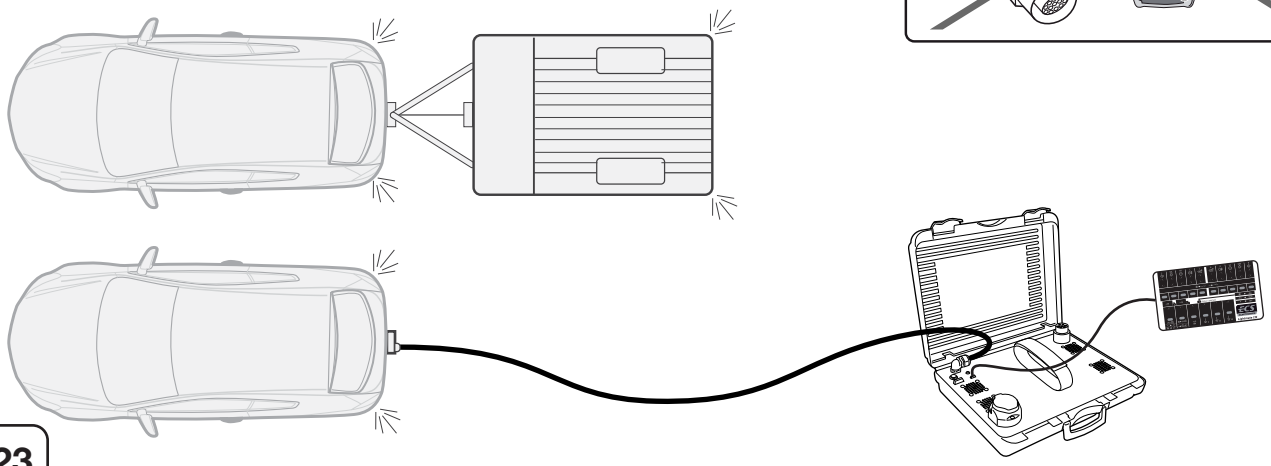

23

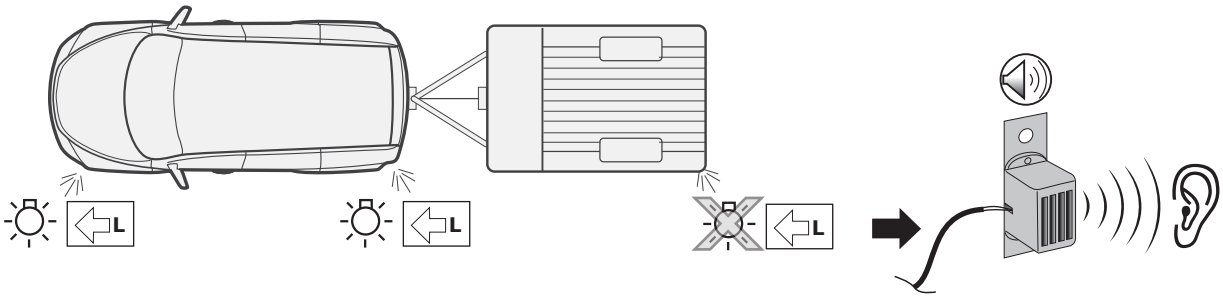

24

Optional

Adapter socket

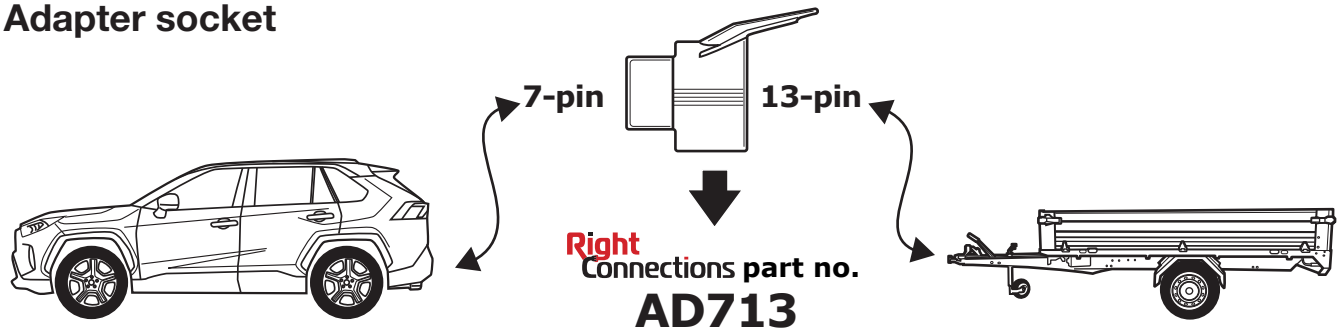

25

Right Connections UK Ltd
Unit 503 Queensway Business Park
TELFORD TF1 7UL UK

SALES: +44 (0)1952 608750 - Option 1
TECHNICAL: +44 (0)1952 608750 - Option 2

Web: www.rightconnections.co.uk
Email: Technical@rightconnect.co.uk

Revision: 5 / 30.09.2026
TO-295-07

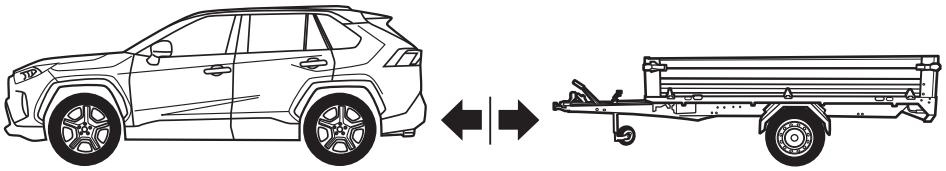

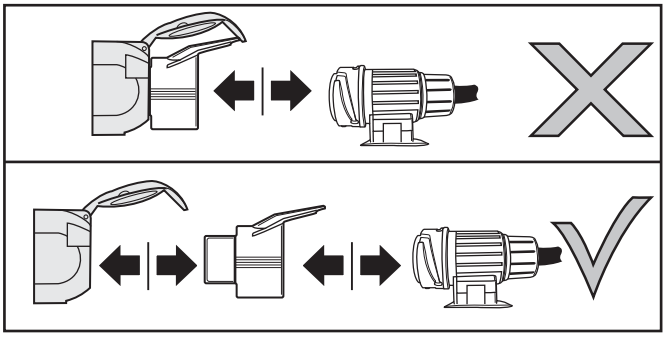

26

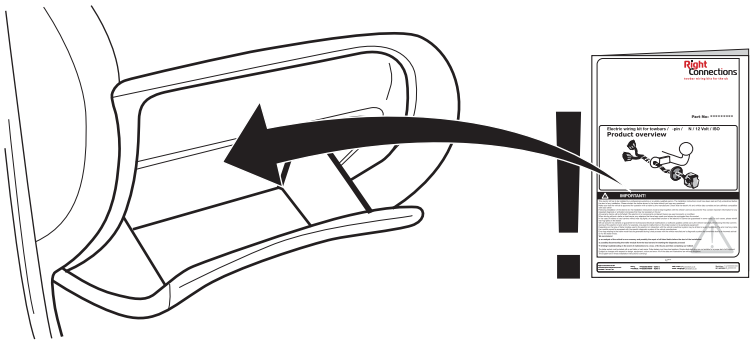

27

Right Connections UK Ltd
Unit 503 Queensway Business Park
TELFORD TF1 7UL UK

SALES: +44 (0)1952 608750 - Option 1
TECHNICAL: +44 (0)1952 608750 - Option 2

Web: www.rightconnections.co.uk
Email: Technical@rightconnect.co.uk

Revision: 5 / 30.09.2026
TO-295-07